EXHIBIT B

US006889579B1

(12) **United States Patent**
Brown

(10) **Patent No.: US 6,889,579 B1**
(45) **Date of Patent: May 10, 2005**

(54) **ADJUSTABLE GRIPPING TOOL**

(75) Inventor: **Daniel P. Brown**, Palos Park, IL (US)

(73) Assignee: **Loggerhead Tools LLC**, Palos Park, IL (US)

(*) Notice: Subject to any disclaimer, the term of this patent is extended or adjusted under 35 U.S.C. 154(b) by 0 days.

(21) Appl. No.: **10/763,489**

(22) Filed: **Jan. 23, 2004**

(51) **Int. Cl.**[7] **B25B 13/28**
(52) **U.S. Cl.** **81/90.2**; 81/58; 81/90.1
(58) **Field of Search** 81/90.2, 58, 90.1, 81/90.3, 90.5, 91.1, 126, 128

(56) **References Cited**

U.S. PATENT DOCUMENTS

599,837	A	3/1898	Harris	
877,773	A	4/1908	Holm	
912,117	A	2/1909	Green	
1,393,267	A	10/1921	Cousins	
2,096,016	A	10/1937	Weishampel	
2,292,391	A	8/1942	Merriman et al.	
2,409,549	A	10/1946	Djidics	
2,547,534	A	4/1951	Oliver	
2,580,247	A	12/1951	Secondi et al.	
2,714,827	A *	8/1955	Kusiv et al.	72/402
2,753,742	A *	7/1956	Buchanan	72/402
2,787,925	A	4/1957	Buchanan	
2,884,826	A	5/1959	Bruhn	
3,177,695	A	4/1965	Van Oort	
3,226,968	A	1/1966	Holmes	
3,664,213	A	5/1972	Anati	
3,713,322	A *	1/1973	Fischer	72/409.09
3,901,107	A	8/1975	Halls	
4,112,792	A	9/1978	Guimarin	
4,277,991	A	7/1981	Stubenrauch	
4,333,357	A	6/1982	Vinther	
4,724,730	A	2/1988	Mader et al.	
4,793,225	A	12/1988	Berkich	
4,813,309	A	3/1989	Kang	
5,067,376	A	11/1991	Fossella	

(Continued)

FOREIGN PATENT DOCUMENTS

EP	0 543 815	5/1992

Primary Examiner—Joseph J. Hail, III
Assistant Examiner—Alvin J. Grant
(74) *Attorney, Agent, or Firm*—Vedder Price Kaufman & Kammholz

(57) **ABSTRACT**

A self-energizing and de-energizing adjustable gripping tool for engaging a workpiece to impart movement thereto includes a first element and second element connected for relative angular movement. The second element includes an actuation portion having a plurality of slots. Each of the slots includes a first section and a second section wherein the first and second sections each define divergent paths. The first element includes a gripping portion having a plurality of gripping elements and a plurality of aligning elements. Each gripping element has a pin connected thereto. One of the aligning elements is disposed between a pair of adjacent gripping elements. One of the force transfer elements engages one first section and one of the aligning elements engages one second section such that movement of the second element relative to the first element results in the first sections contacting each of the force transfer elements to actuate the gripping elements and the second sections contacting the aligning elements to maintain orientation of the first element with respect to the second element.

26 Claims, 8 Drawing Sheets

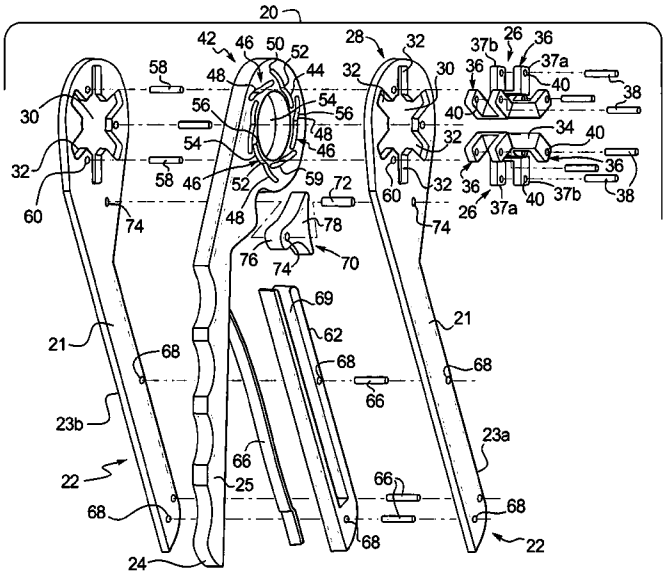

U.S. PATENT DOCUMENTS

5,076,121	A		12/1991	Fossella
5,090,273	A		2/1992	Fossella
5,207,129	A		5/1993	Fossella
5,235,878	A		8/1993	Young
5,249,490	A		10/1993	Kennel
5,261,263	A	*	11/1993	Whitesell 72/409.19
5,305,670	A		4/1994	Fossella et al.
5,377,566	A		1/1995	Mandigo
5,448,931	A		9/1995	Fossella
5,531,549	A		7/1996	Fossella
5,819,607	A		10/1998	Carnesi
5,893,306	A		4/1999	Owoc
5,957,010	A		9/1999	Petts
6,073,522	A		6/2000	Carnesi
6,164,107	A		12/2000	Korba, Jr.
6,227,076	B1		5/2001	Murray
6,341,544	B1		1/2002	Falzone
6,530,298	B1		3/2003	Steffe
2002/0144575	A1		10/2002	Niven
2003/0121376	A1		7/2003	Huang

* cited by examiner

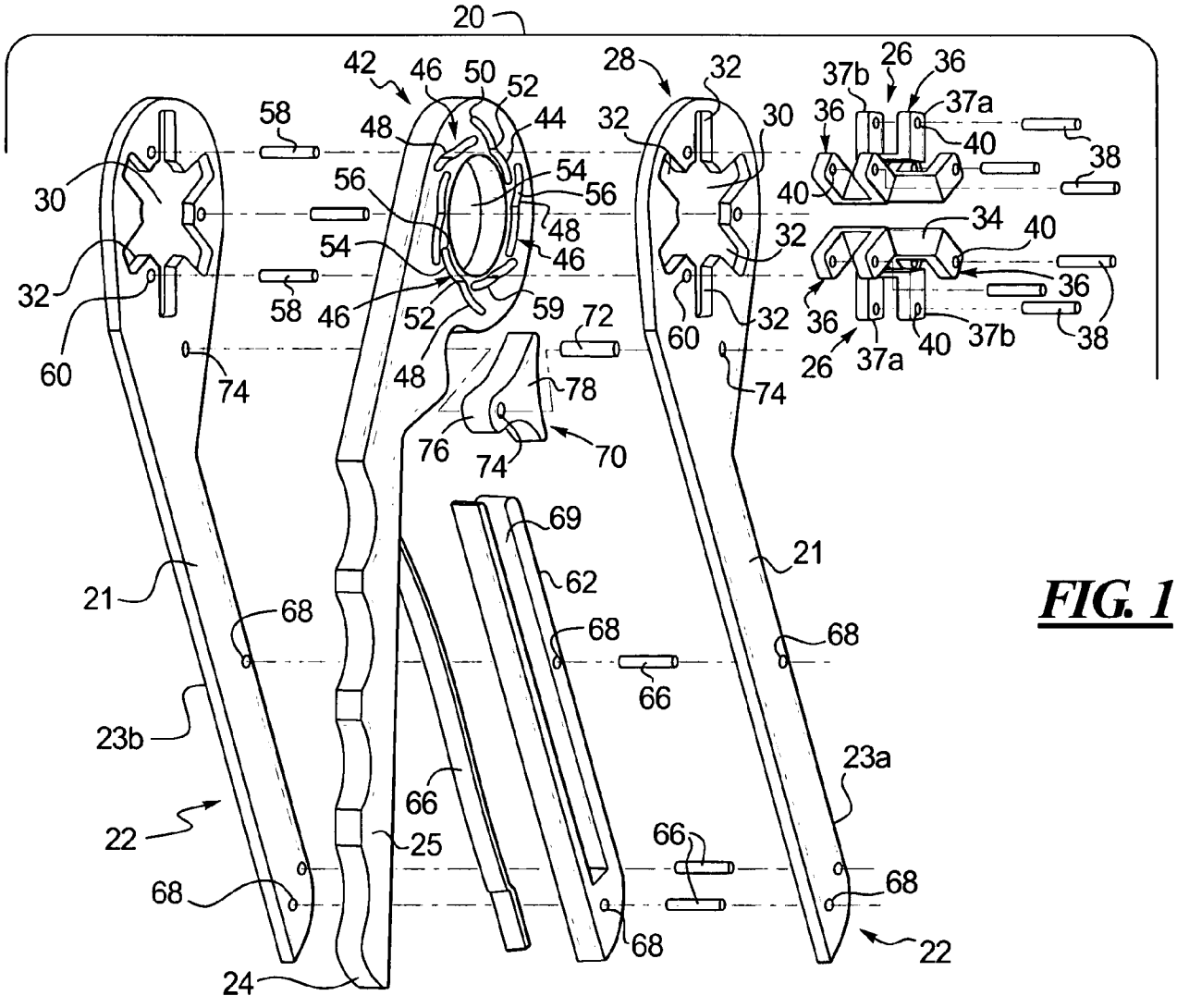
20
42
46
50
52
28
32
37b
26
36
37a
58
48
44
30
40
38
56
54
34
32
60
74
59
72
78
76
70
69
62
21
68
66
23b
23a
22
25
24

FIG. 1

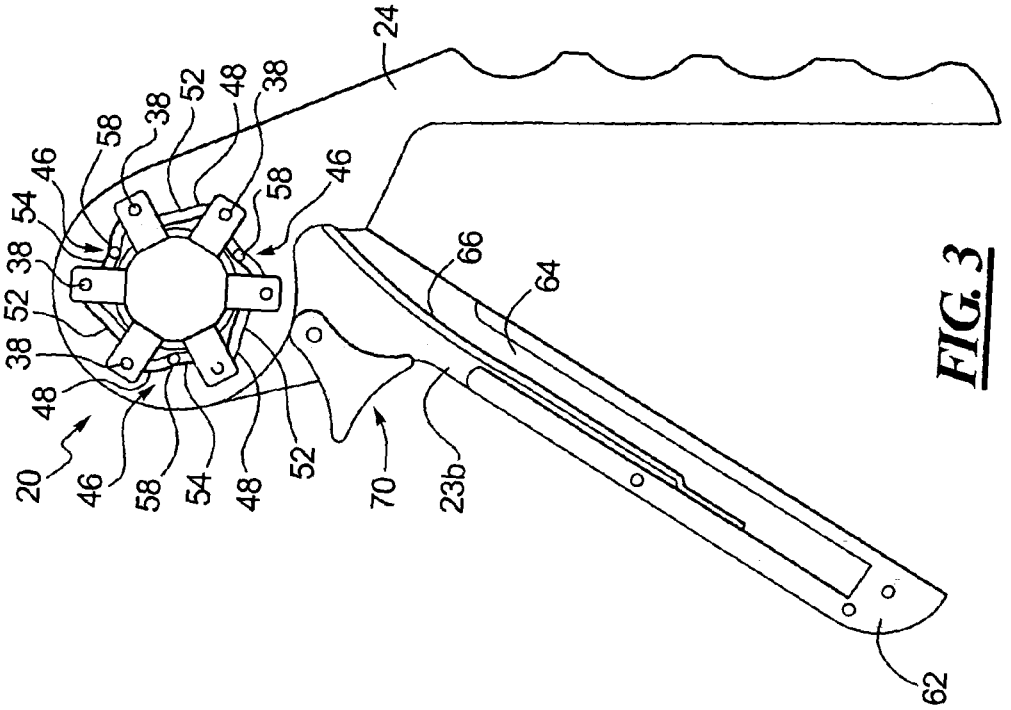
24
38
52
48
58
46
54
38
52
38
48
20
46
58
54
48
52
70
23b
66
64
62

FIG. 3

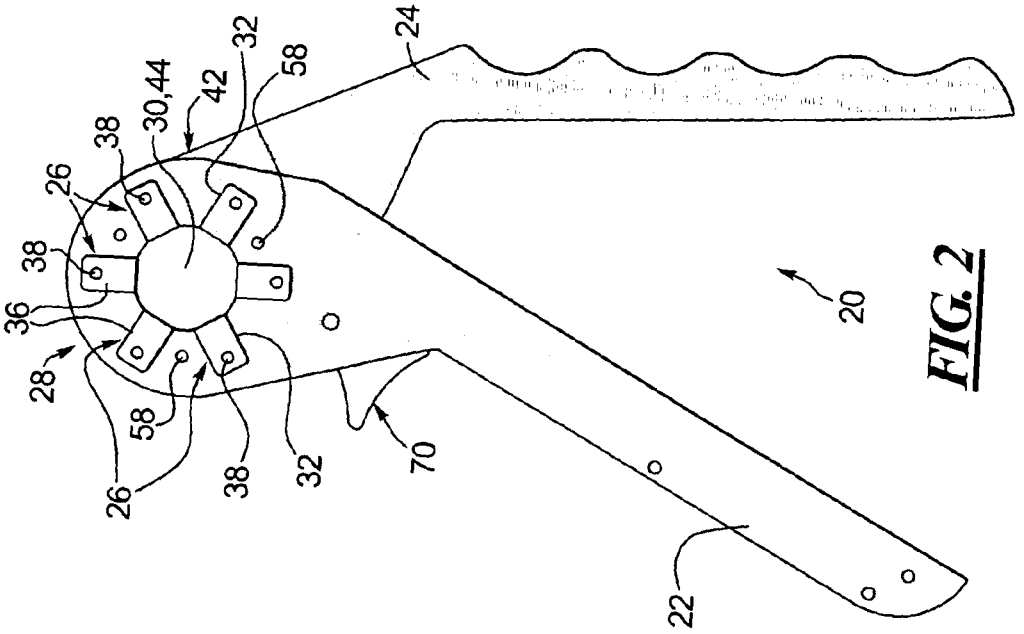
24
32
58
30,44
42
38
26
38
36
28
58
26
38
32
70
22
20

FIG. 2

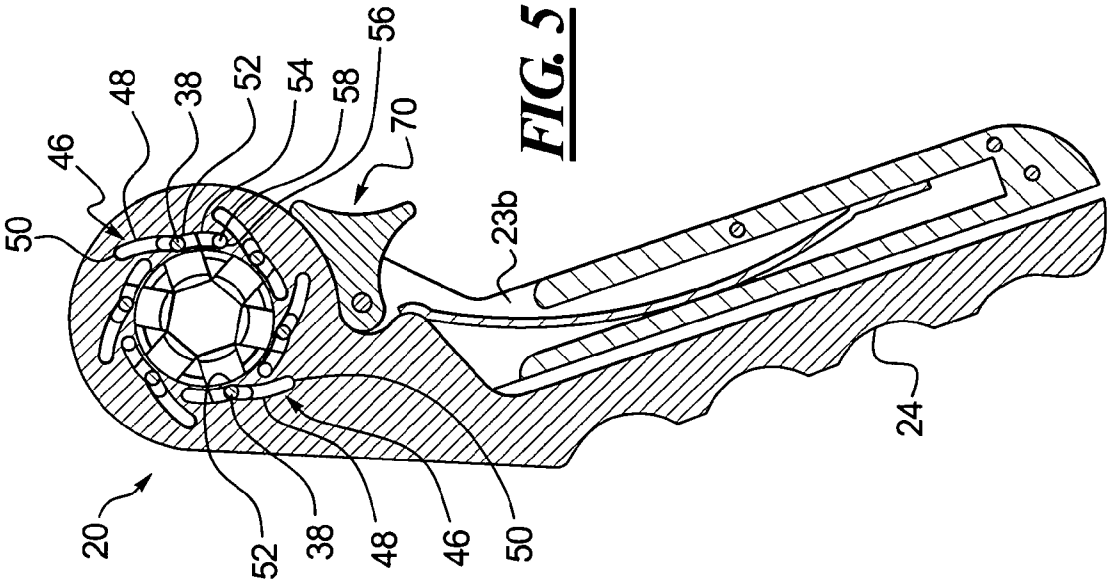

FIG. 5

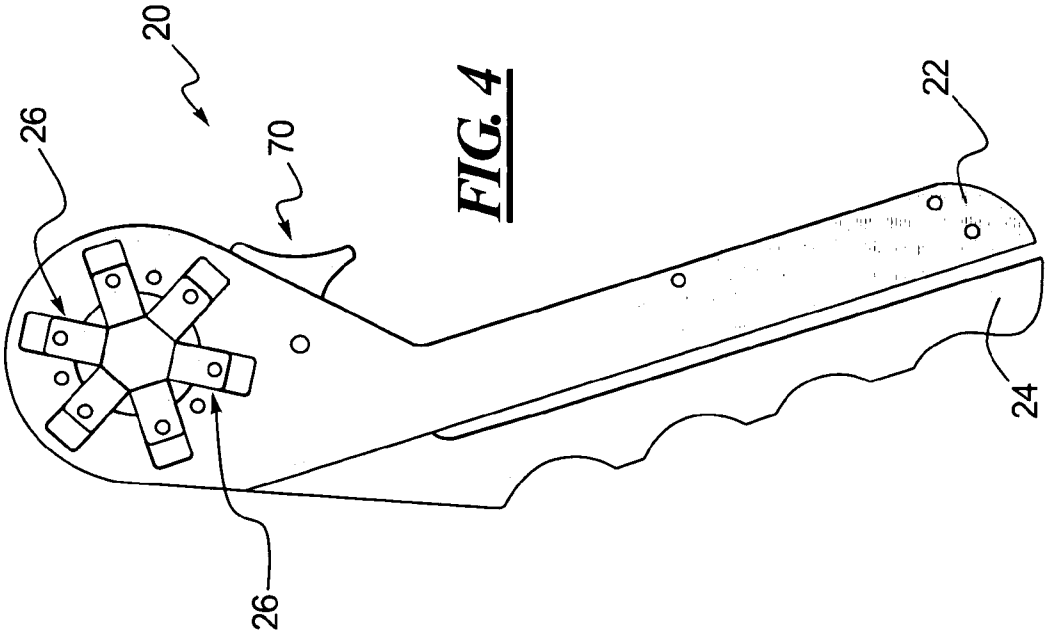

FIG. 4

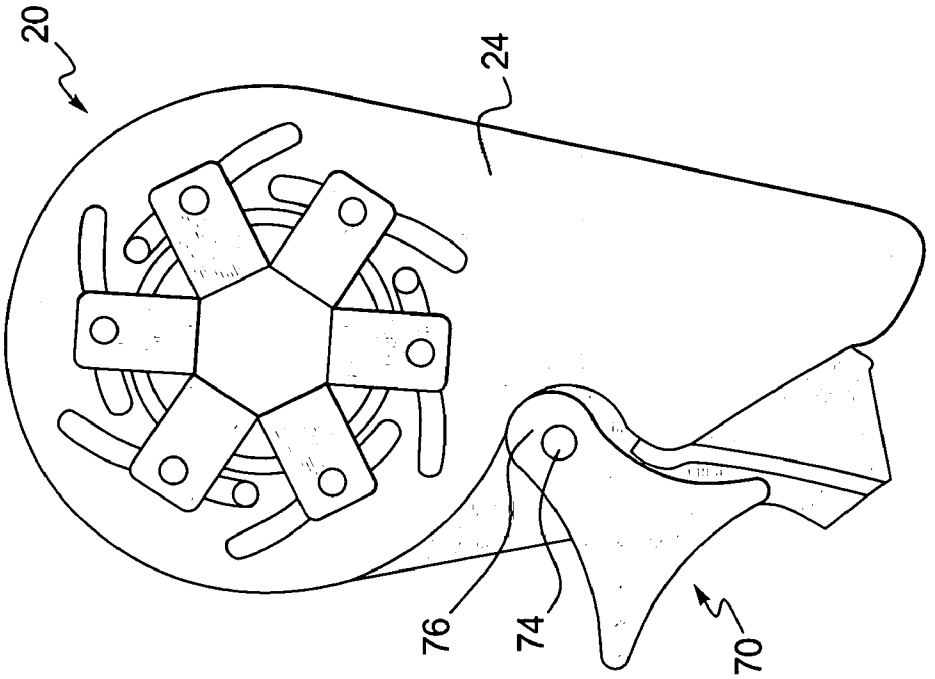

FIG. 7

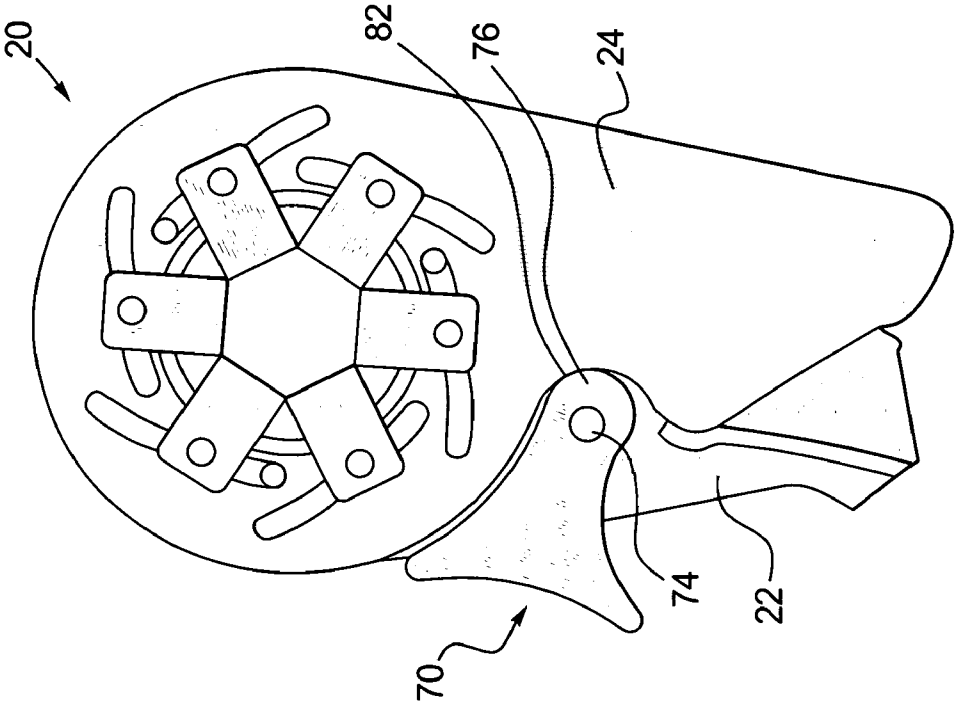

FIG. 6

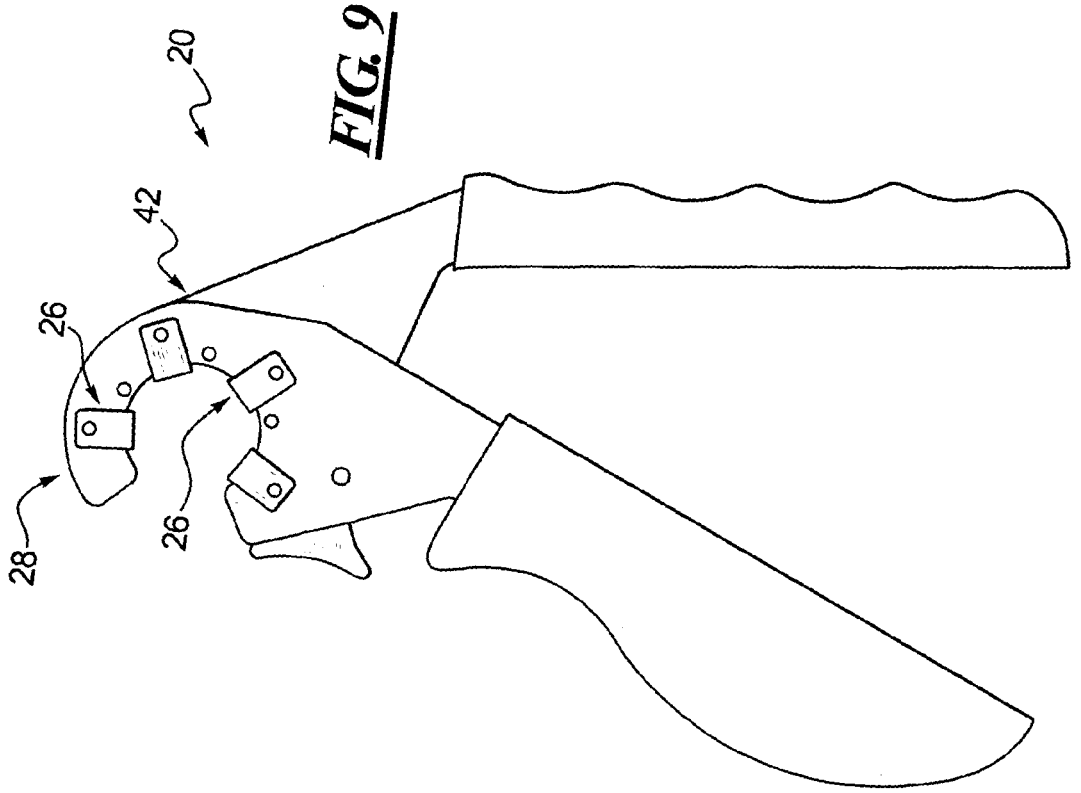

FIG. 9

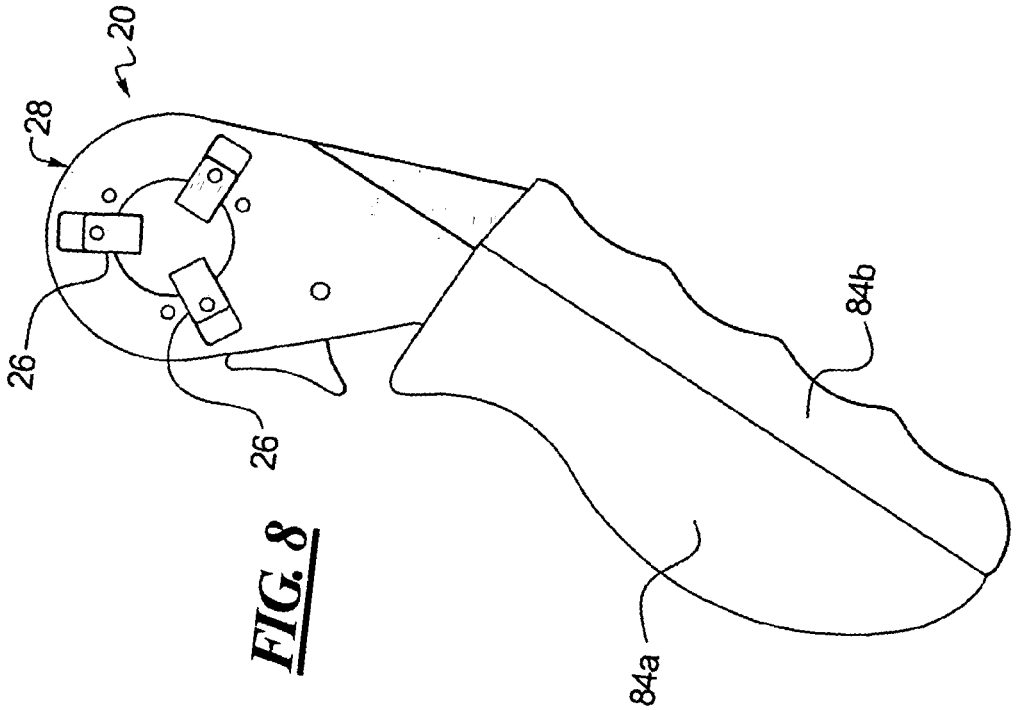

FIG. 8

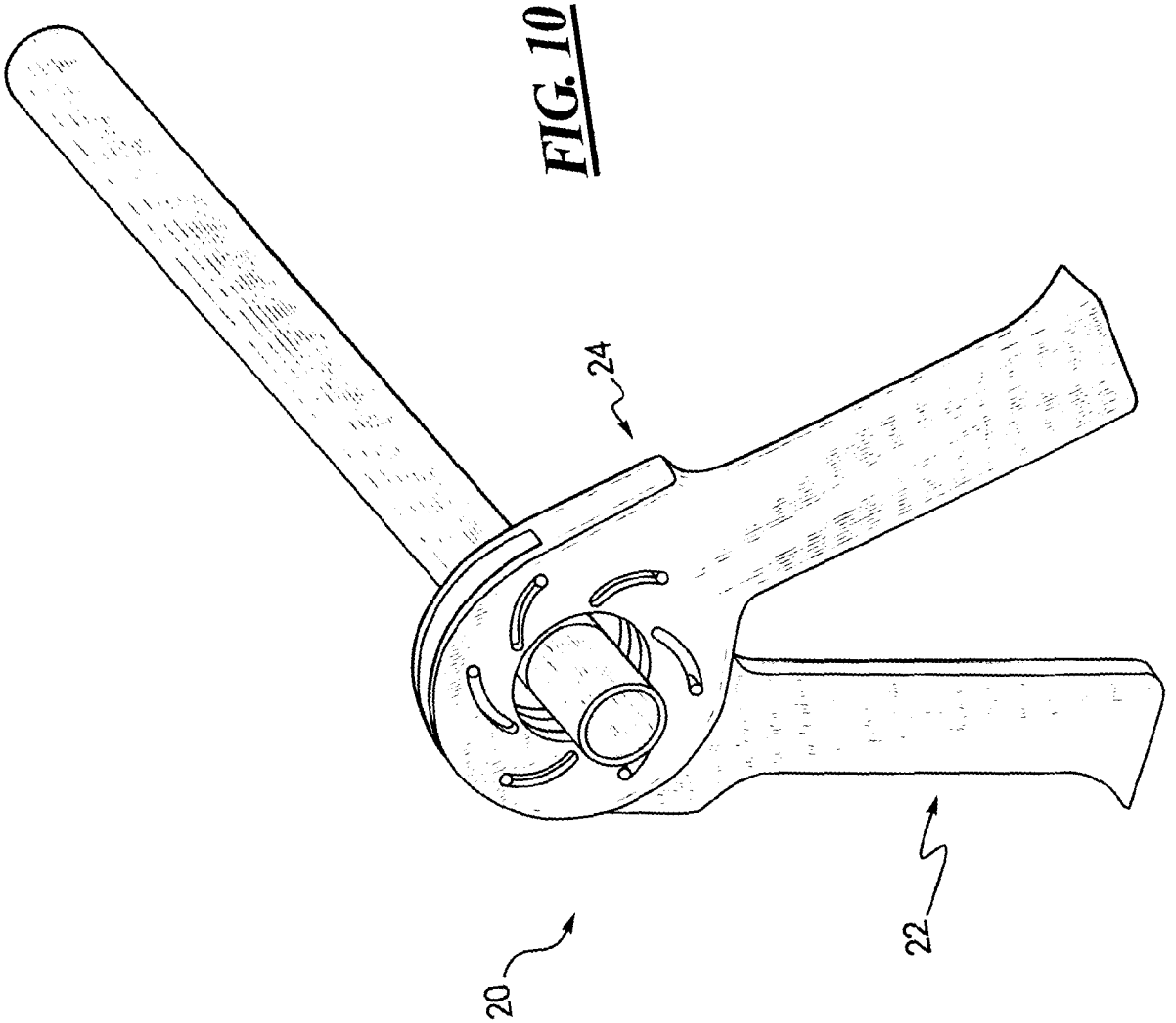

FIG. 10

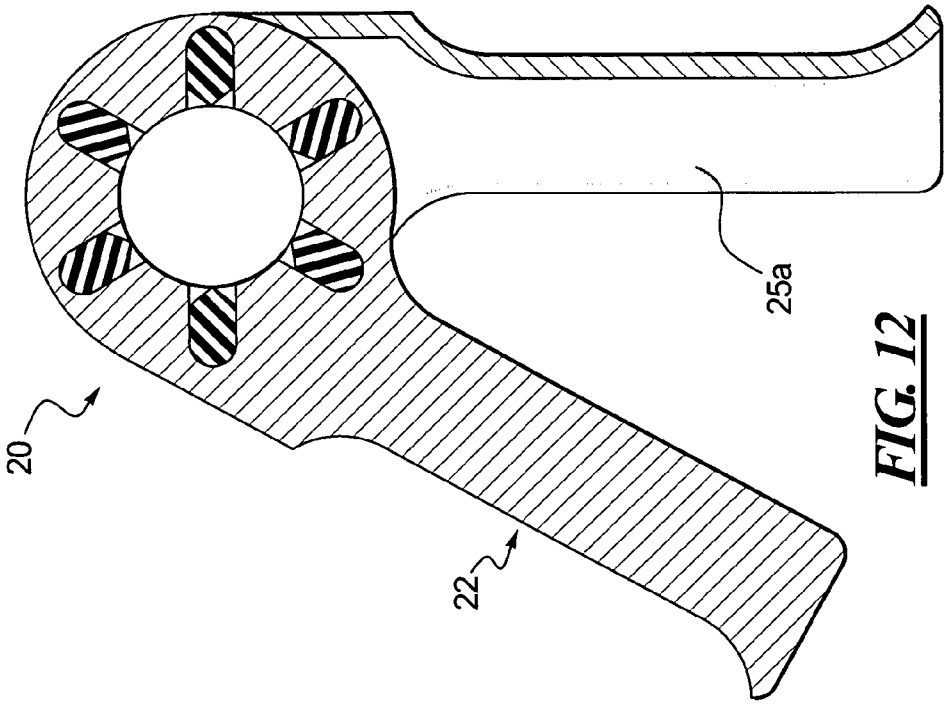

FIG. 12

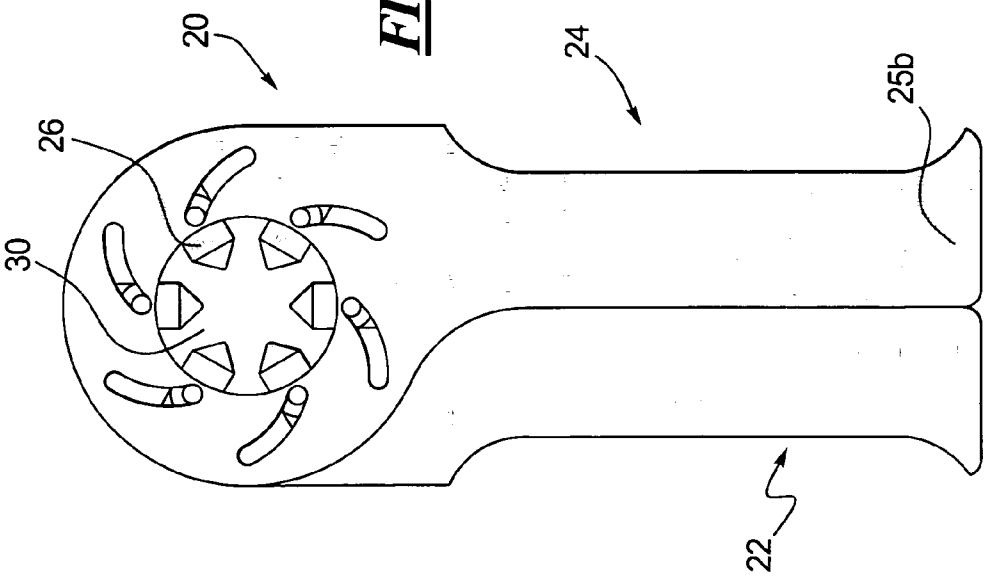

FIG. 11

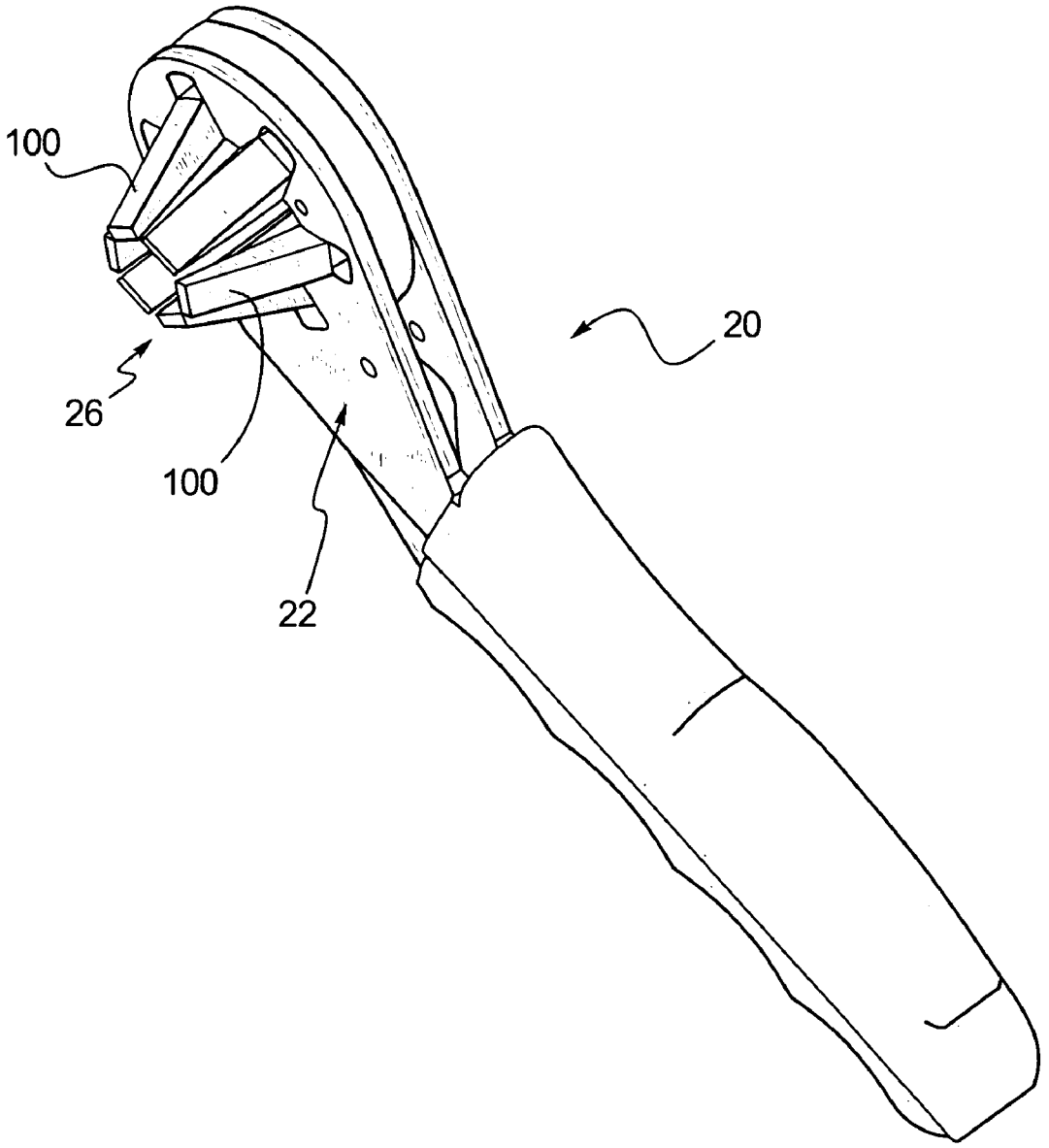

FIG. 13

ADJUSTABLE GRIPPING TOOL

BACKGROUND OF THE INVENTION

This invention pertains to a hand tool and more particularly, to an adjustable gripping tool which, as a result of manual operation, self-energizes, automatically configures to engage differently dimensioned and shaped workpieces and de-energizes upon release of actuating force.

Various types of adjustable gripping tools are known in the art. Specifically, several known adjustable gripping tools are embodied in the form of a "crescent" wrench, an adjustable socket wrench, pipe wrench, vice grips, crimpers, bolt and nut cutters, pipe and tube cutters, and various other "plier-type" gripping tools. A crescent wrench is an adjustable open end wrench that has stationary rotatable screw which engages a toothed rack formed on a first jaw element movable with respect to the second jaw element extending from the first element. The adjustable socket wrench includes a shell housing movable elements, such that movement of the first element with respect to the shell causes the elements to move with respect to the shell in order to engage the workpiece. One cutting tool version has adjustable cutting jaws that when tightened and rotated around a tube score and cut the tube. Another version of the cutting tool uses a blade cutting mechanism. The plier-type devices include a pair of first elements connected in such a manner so as to move at least two jaws toward one another in order to engage the workpiece. The crimping tools provide various functions, such as specialty segmented dies that expand or contract via interaction of a tapered boy with a fixed diameter or a plier-type device crimper with jaws that have been modified as a special head to crimp the workpiece.

Each of the prior art devices have disadvantages. The crescent wrench is not automatically resizable during use. The socket device is limited in its effective range of dimensional capability. In other words, a large number of sockets is needed to service a relatively standard range of workpieces, the workpieces must have a standard configuration and the workpieces must be engaged axially.

The plier-type devices fail to engage the workpiece evenly around or within the circumference with proper offsetting forces and stability which aides in operation of the tool. The plier-type devices also concentrate the applied mechanical forces in a point-loading configuration creating pressure points and stress risers on the workpiece surface.

The tube cutting devices cannot be used with one hand. Another disadvantage of tube cutting devices, in particular, knife blade cutters, is that the tubing is often distorted as a result of the asymmetrical cutting forces applied by the blade against the tube. Other tube cutting devices, such as screw-and-wheel-type tube cutters require continuous rotation of the cutting wheel around the circumference of the tube while simultaneously increasing the force applied by the cutting wheel to the tube in order to increase the cutting depth.

Prior art crimping devices cannot create symmetrically balanced crimps with a simple hand tool. For example, crimping a metal sleeve on a hydraulic hose requires a press and a proper die for proper application. Also all of the previously available gripping tools either loosely hold the workpiece or hold the workpiece in a manner that concentrates and focuses the gripping forces in a point pressure-loading configuration. This concentration of gripping forces is on certain points concentrates the force and serves to

oftentimes deform the workpiece. Also the previously available tools for wrench applications could not be easily sized to the workpiece.

Therefore, there exists a need in the prior art for an adjustable gripping tool which, as a result of manual operation, self-energizes the tool action, may be automatically sized and resized to engage a workpiece, de-energizes upon release of actuation force, that has a broad range of dimensional capability, engages workpieces axially and radially and provides offsetting forces for stability in operation. Beyond the ability to resize the gripping range, the gripping tool of the present invention symmetrically translates the force applied to the gripping tool onto the workpiece in a symmetrically balanced and mechanically advantaged and efficient way. Thus, an even distribution of gripping and rotational force about the workpiece is achieved; whereby allowing for the most efficient distribution of mechanical stress about the workpiece. For any given force required to manipulate the workpiece the present invention will accomplish the work with the minimal distortion of the workpiece by distributing the work force over the largest area of the workpiece. Other advantages of the adjustable gripping tool of the present invention include decreased costs, increased productivity and multi-access engagement of the workpiece resulting in a mechanically advantaged, efficient, even and balanced distribution of working forces.

BRIEF DESCRIPTION OF THE DRAWINGS

In the course of the following detailed description, reference will be made to the attached drawings, wherein like reference numerals identify like parts and in which:

FIG. **1** is an exploded perspective view of an adjustable gripping tool in accordance with the principles of the present invention.

FIG. **2** is a top plan view of the adjustable gripping tool of FIG. **1** disposed in an open or first operative position.

FIG. **3** is a sectioned view of the adjustable gripping tool of FIG. **2** wherein one component of a first element has been removed.

FIG. **4** is a top plan view of the adjustable gripping tool of FIG. **1** disposed in a closed or second operative position.

FIG. **5** is a sectional view of the adjustable gripping tool of FIG. **4** taken along a line passing through a second element of the adjustable gripping tool.

FIG. **6** is a detailed broken-away section view of the adjustable gripping tool of FIG. **6** wherein one element of the first component has been removed.

FIG. **7** is a detailed broken-away section view of the adjustable gripping tool of FIG. **6** wherein the lock mechanism is disposed in a locked or second operative position.

FIG. **8** is a top plan view of another embodiment of an adjustable gripping tool in accordance with the principles of the present invention.

FIG. **9** is a top plan view of yet another embodiment of an adjustable gripping tool in accordance with the principles of the present invention.

FIG. **10** is a perspective view of another embodiment of an adjustable gripping tool in accordance with the principles of the present invention.

FIG. **11** is a top plan view of the adjustable gripping tool of FIG. **10**, disposed in a closed or second operative position.

FIG. **12** is a sectional view of the adjustable gripping tool of FIG. **11** taken along a line passing through the second element of the adjustable gripping tool.

FIG. **13** is a perspective view of another embodiment of an adjustable gripping tool in accordance with the principal aspects of the present invention.

DETAILED DESCRIPTION OF A PREFERRED EMBODIMENT OF THE INVENTION

One principal aspect of the present invention is directed to an adjustable gripping tool for engaging a workpiece to impart work thereto. The gripping tool includes a first element and a second element connected for a relative angular movement which when activated generates movement of at least one gripping or workpiece engaging element. The first element includes a gripping portion configured to engage the workpiece including a first opening, at least one guide extending from the first opening and at least one gripping element. Each at least one gripping element includes a body portion adapted for engaging a workpiece, an arm portion configured to engage one of the guides and a force transfer element contiguous with the arm portion. The second element includes an actuation portion having a second opening concentric with the first opening and at least one slot disposed adjacent the second opening. Each of the slots has a first section configured to engage one of the force transfer elements such that movement of the second element with respect to the first element simultaneously actuates each at least one first section to contact and move one of the force transfer elements thereby actuating the gripping elements along the guides.

Yet another principle aspect of the present invention is directed to an adjustable gripping tool for engaging a workpiece to impart work thereto which includes a first element and a second element connected for relative angular movement. The second element includes an actuation portion having a plurality of slots. Each of those slots includes a first section and a second section wherein the first and second sections each define divergent paths. The first element includes a gripping portion having a plurality of gripping elements and at least one alignment element. Each gripping element has a force transfer element contiguous therewith. Each of the aligning elements is disposed between a pair of gripping elements. One of the force transfer elements engages one first section and one of the aligning elements engages one second section such that movement of the second element relative to the first element results in the first sections contacting each of the force transfer elements to actuate the gripping elements and the second sections contacting the aligning elements to maintain orientation of the first element with respect to the second element.

FIG. **1** illustrates in an exploded perspective view of the adjustable gripping tool **20** in accordance with principles of the present invention. The adjustable gripping tool **20** primarily includes a first element **22** and a second element **24** connected for relative angular movement. In one embodiment of the present invention, the first element **22** includes a pair of elements **23**A, **23**B disposed on opposing sides of the second element **24**. It is within the teachings of the present invention that the first element **22** may be configured with a single element **23**A or **23**B, or as a pair of elements **23**A, **23**B as may be desired with respect to other design factors of importance to one of skill in the art. The first element **22** includes a first grasping portion **21** and the second element **24** includes a second grasping portion **25**. The relative angular movement between the first element **22** and the second element **24** generates concentric linear movement of the gripping elements **26**.

The first element **22** further includes a gripping portion **28** disposed at one end of the first grasping portion **21** and configured to engage the workpiece (not shown) including a first opening **30**, a plurality of guides **32** extending radially from the first opening **30** and the gripping elements **26**. The gripping elements each include a body portion **34** adapted for engaging the workpiece, an arm portion **36** configured to engage one of the guides **32** and a force transfer element **38** connected to the arm portion **36**. It is within the teachings of the present invention that the gripping elements may be integrally formed in any suitable manner.

In one embodiment of the present invention, the arm portion **36** of the gripping elements **26** further include a pair of arms **37**A, **37**B disposed at opposite ends of the body portion **34** such that the gripping elements **36** are substantially U-shaped. It will be recognized by those of skill in the art that the pair of arms **37**A, **37**B, when so provided engaged the respective guides **32** formed in the first element elements **23**A, **23**B, respectively. The pair of arms **37**A, **37**B each include an aperture **40** aligned such that one of the force transfer elements **38** is contiguous therewith for positioning and actuation of the gripping elements **26** as detailed below.

It is within the teachings of the present invention that the gripping elements may have a smooth or rough face with which to engage the workpiece, as desired. For example, the rough face may have a grooved, serrated, checked or any other suitable finish. Furthermore, the force transfer elements **38** may be configured as pins or other suitable structure to provide the functions as described herein. Moreover, the first element and/or each of the elements thereof may often be referred to as a handle and the second element may often be referred to as a lever. It will be recognized by those of skill in the art that the terms used herein are not of a limiting sense. Rather, these terms are used to broadly describe the structure and function herein.

The second element **24** further includes an actuation portion **42** disposed at one end of the second grasping portion **25** and having a second opening **44** concentric with the first opening **30** and a plurality of slots **46** disposed adjacent the second opening **44**. Each of the slots **46** has a first section **48** configured to engage one of the force transfer elements or pins **38** such that movement of the second element **24** with respect to the first element **22** simultaneously actuates the first sections **48** to contact and move the force transfer elements **38** along a path defined by the first section thereby actuating the gripping elements **26** along the guides **32**. It will be recognized by those of skill in the art that the first sections **48** define a path which generally decreases in terms of radial measurement from a center of the second opening **44** from a first outer end **50** to an inner end **52**. In another embodiment, the paths may generally increase in terms of radial measurement from the center of the second opening **44** such that relative movement between first and second elements generates an outward motion of the gripping elements. Alternatively, the guides, slots and force transfer element may be configured to interact in a number of different ways to move the actuation elements into movement with the gripping or workpiece engaging elements. For example, a pair of slots may be formed in a pair of cooperative second elements where each slot defines an arcuate path and the pair of slots simultaneously act on the force transfer member to effect movement thereof.

In one embodiment, each of the slots **46** further includes a second section **54** extending from the first section **48**. It will be recognized by those of skill in the art that the second section **54** defines a path which is generally consistent in

terms of radial measurement from the center of the second opening **44** from the inner end **52** to a second outer end **56**.

In one embodiment of the present invention, the first element **22** further includes a plurality of aligning elements **58** for engaging the second sections **54** and where the two elements **23**A, **23**B are used for positioning and interconnecting the elements **23**A, **23**B of the first element **22**. Each aligning element **58** is disposed between an adjacent pair of guides **32** and extends parallel to the force transfer element **38**. Apertures **60** are formed in the first elements **23**A, **23**B to receive and engage the aligning elements **58**. In operation, each one of the aligning elements **58** engages one of the second sections **54** so that during relative angular movement between the first element **22** and the second element **24**, or first and second elements, respectively, the first and second openings **30**, **44** remain concentrically aligned. It will be recognized by those of skill in the art that the second sections **54** **46** engage the aligning elements **58** in response to the forces induced by the divergent path of the first sections **48** on the force transfer elements **38**. As a result, not only do the first and second openings **30**, **44** remain concentrically aligned, but the gripping elements **26** are actuated along the guides **32** with equal, likewise displacement.

A spacer **62** may be used to interconnect the elements **23**A, **23**B to define a pocket **64** such that a spring **66** disposed within the pocket contacts the second element **24** in order to dispose the second element is a normally open position (see FIGS. **2** and **3**). The spacer may be connected to each of the elements **23**A, **23**B by press fit pins **66** engaging aligned apertures **68** or any other suitable device or in any other suitable manner.

A lock mechanism **70** is connected to the first element **22** such that operative movement of the lock mechanism **70** from a first operative position (see FIGS. **4** and **5**) to a second operative position (see FIGS. **2** and **3**) secures the first element **22** and second element **24** in any desired angular orientation. The lock mechanism **70** may be connected between the elements **23**A, **23**B by a press fit pin **72** engaging aligned apertures **74** or by any other suitable device or in any other suitable manner. The inner or operative end **76** of the lock mechanism **70** is configured as a cammed or eccentric surface. In one embodiment, this may be achieved by disposing aperture **74** offset from the longitudinal axis of the lock mechanism **70**. Alternatively, an eccentric shaped surface may be defined on the inner or operative end **76** or by any other suitable manner.

When oriented in the first operative position (See FIGS. **4** and **5**), the inner end **76** of the lock mechanism **70** defines a clearance (**82**, see FIG. **6**) with respect to the second element **24**. Movement of the actuating end **78** of the lock mechanism **70** from the first operative position to the second operative position (See FIGS. **2** and **3**) moves the inner end **76** about the aperture **74** such that the operative end **76** binds against the second element **24** thereby securing the first element and second element in a desired angular orientation.

In one embodiment of the present invention, the gripping portion **28** includes six gripping elements **26**. However, it would be recognized by those of skill in the art, that the gripping portion **28** need include only at least two gripping or engaging elements **26** and that any other suitable number of gripping or workpiece engaging elements may be provided.

FIG. **2** illustrates the adjustable gripping tool of FIG. **1** disposed in an open position. The second element **24** is biased from the first element **22** as described above to maintain such open position.

The lock mechanism **70** is disposed in the second operative position securing the first element **22** and second element **24** a desired angular orientation. The adjustable gripping tool **20** of this embodiment is configured such that the gripping portion **28** and the actuation portion **42** are adapted to circumferentially engage the workpiece. However, in FIG. **2**, the gripping elements **26** are disposed such that the arms **36** engage the guides **32** in a manner which is characteristic of the open position of the adjustable gripping tool **20**. The force transfer elements **38** and aligning elements **58** are shown as force transfer elements press fit to the gripping elements **26** and first element **22** respectively. Alternatively, the force transfer elements can be manufactured as a protrusion of the gripping or workpiece engaging element.

FIG. **3** illustrates a section view of the adjustable gripping tool **20** of FIG. **2** wherein one element of the first element **22** has been removed. Element **23**B is shown having spacer **62** connected thereto to define a pocket **64** such that the spring **66** disposed within the pocket **64** contacts the second element **24** to bias the second element **24** in the open position. As described above, the lock mechanism **70** is engaged in the second operative position securing the first element **23**B and second element **24** in the desired open position. Aligning elements **58** are disposed at the inner end **52** of the slot **46** which defines a point of separation between the first section **48** and the second section **54**. The force transfer elements **38** are disposed at the outer end **50** of the first section **48** of the slot **46** as will be shown and described in more detail below.

FIG. **4** illustrates an adjustable gripping tool **20** disposed in a closed position wherein the first element **22** and second element **24** are disposed immediately adjacent. The lock mechanism **70** is disposed in the first operative position, unlocked. The gripping elements **26** have been moved from an open position, as shown in FIGS. **2** and **3**, to a closed position such that the gripping elements are adapted for engaging the workpiece.

FIG. **5** illustrates a section view of the adjustable gripping tool **20** of FIG. **4** taken through the second element where the adjustable gripping tool is disposed in the second operative or closed position. The first element is represented by element **23**B which is disposed immediately adjacent the second element **24**. The force transfer elements **38** have been moved as a result of contact with the first section **48** of the slots **46** from an outer end **50** to an inner end **52**. The aligning elements **58** have been moved from an inner end from the second section **54** of the slot **56** to an outer end **56**. It will be recognized by those of skill in art that the paths defined by the first and second sections **48**, **54** of the slot **46** are divergent. The aligning elements **58** engage the second portion **54** of the slot **46** in order to maintain proper orientation between the first element **22** and the second element **24**. The force transfer elements **38** engage the first portion **48** of the slot **46** such that the generally decreasing diameter dimension of the path defined by the first portion **48** causes the force transfer elements to move closer to the center of the first and second openings **30**, **44**. Accordingly, the gripping elements **26** are likewise actuated along the guides **32** to engage the workpiece. The lock mechanism **70** is disposed in a first operative position. It should also be noted that the slots can be reversed and the action reversed such that the actuation elements are radiating from the center during activation.

FIG. **6** illustrates a detailed broken away view of the adjustable gripping tool **20** of FIGS. **4** and **5**. The lock mechanism **70** is disposed in a first operative or open

position. The lock mechanism **70** is connected to the first element **22** by a pin **74** which is disposed offset from a longitudinal axis of the lock mechanism **70**, such that in this first operative position, a clearance **82** is defined between the lock mechanism operative or inner end **76** and the second element **24**.

FIG. **7** illustrates the adjustable gripping tool **20** of FIG. **6** wherein the lock mechanism **70** has been moved from the first operative position (shown in FIG. **6**) to a second operative position. As a result of movement of the lock mechanism **70** the clearance is eliminated between the operative or inner end **76** and the second element **24**. Accordingly, the lock mechanism **70** binds against the second element **24** such that the first element and second element **24** cannot be moved relative to one another without first releasing the lock mechanism **70**. It will be recognized by those of skill in the art that the pin **74** used to mount the lock mechanism **70** to the first element **22** is most often offset from the longitudinal axis of the lock mechanism **70**. However, an eccentric surface at the inner or operative end **76** may also be formed to enable the same function.

FIG. **8** illustrates another embodiment of the present invention of the adjustable gripping tool **20** wherein only three gripping elements **26** are shown. It is within the teaching of the present invention that the gripping portion **28** only include at least one gripping element **26**. Grips **84**A, **84**B may also be provided for the first element **22** and second element **24** to further facilitate effective actuation of the adjustable gripping tool **20**. The remaining structure and function of this disembodiment of the present invention remains the same as detailed above.

FIG. **9** illustrates yet another embodiment of the present invention directed to an adjustable gripping tool **20**. In this embodiment of the present invention, the gripping portion **28** and the actuation portion **42** are configured penannular. Such configuration enables the wrench **20** to engage the workpiece laterally or in a radial direction. Further, four gripping elements **26** are illustrated in this embodiment. The remaining structural and functional elements and aspects of this embodiment of the present invention remain the same as detailed above.

FIG. **10** illustrates another embodiment of the present invention wherein the adjustable gripping tool **20** is configured as a cutting or scoring device for engaging, for example, a tubular element. In this embodiment, the second element **2**A is configured substantially U-shaped. Such configuration may be achieved by binding, folding or otherwise forming a unitary element as shown in FIG. **10**. It will be recognized by those of skill in the art that the orientation of some of the structural elements in this embodiment have been in comparison to the configuration of the tools above. Otherwise, the operation and function of this embodiment is as described above.

The first and second elements **22**, **24** are connected for relative angular movement in order to generate linear movement of the gripping elements. It is within the teachings of the present invention that the gripping elements may also be configured to score or cut a workpiece. For example, in one embodiment, the gripping elements described above which are configured to engage the workpiece as described above may be replaced with gripping elements configured to perform the scoring or cutting functions.

FIG. **11** illustrates a top plan view of the embodiment of the present invention in FIG. **10** disposed in a closed position. The first and second elements **22**, **24** have been moved toward one another such that the gripping elements **26** extend into the first opening **30** to engage a workpiece (not shown). As shown in FIG. **10**, this embodiment is configured to engage a tubular element, such as a pipe or other suitable workpipe. For example, a polyvinyl chloride ("PVC") pipe may be cut or scored with the sharp-edged gripping elements of this embodiment and not distort the PVC pipe. As a result, in addition to a clean perpendicular cut-off, the PVC pipe is not deformed so that further coupling is problematic. Otherwise, this embodiment functions in accordance with the other tools described above.

FIG. **12** illustrates a sectional view of the adjustable gripping tool **20** of FIG. **10** taken through the first element **22**, where the tool **20** is disposed in an open position. The gripping element **26** disposed within the guides **32** include all the structural elements as described above. However, rather than a U-shaped body, a force transfer element extends from each side of the body portion to engage the slots of the pair of elements **25***a*, **25***b* (**25***b* in FIG. **11**) which comprise the second element **24**.

FIG. **13** illustrates a perspective view of another embodiment of an adjustable gripping tool in accordance with the principal aspects of the present invention. In this embodiment of the present invention, the adjustable gripping tool **20** includes gripping elements **26** which have extensions **100** that extend beyond the first element **22**. The extensions **100** facilitate engaging workpieces disposed in a space-limited location, where access for the entire tool **20** may be difficult or problematic. The remaining structural and functional elements and aspects of this embodiment of the present invention remain the same as detailed above. Alternatively, other structural elements may be formed on the extensions **100** to enable additional functions for the tool **20**, such as crimping, cutting, or any other suitable function.

The inventions is not limited to the details of the apparatus depicted and other modification and applications may be contemplated. For example, the force transfer elements and aligning elements may be changed as desired for other bearing elements. The gripping elements themselves may ha be varied in size, shape, or quantity. And the gripping elements may have a cutter, roller or blade attached to perform cutting or scoring operations. Also, the size, shape and position of the openings may be altered as desired to suit particular applications. Certain other changes may be made in the above-described apparatus without departing from true spirit and scope of the invention here involved. It is intended, therefor that the subject matter of the above depiction shall be interpreted as illustrated and not in a limiting sense.

What is claimed is:

1. An adjustable gripping tool for engaging a workpiece to impart work thereto, the tool comprising:

a first element and a second element connected for relative angular movement which generates movement of at least one gripping element;

the first element including a gripping portion configured to engage the workpiece including a first opening, at least one guide extending from the first opening and the at least one gripping element;

each at least one gripping element including a body portion adapted for engaging the workpiece, an arm portion configured to engage one of said at least one guide and a force transfer element contiguous with the arm portion;

the second element including an actuation portion having a second opening concentric with the first opening and at least one slot disposed adjacent the second opening external thereto, each said at least one slot having a first section configured to engage the force transfer element

of one said at least one grinning element, such that movement of the second element with respect to the first element actuates each at least one first section to contact and move each respective force transfer element thereby actuating each said at least one gripping element along respective said at least one guide.

2. The gripping tool as recited in claim **1**, further including a lock mechanism disposed on the first element operable to secure the first element and second element in a desired angular orientation.

3. An adjustable gripping tool for engaging a workpiece to impart work thereto, the tool comprising:

a first element and a second element connected for relative angular movement which generates movement of at least one gripping element;

wherein the first element includes a pair of elements disposed on opposing sides of the second element;

the first element including a gripping portion configured to engage the workpiece including a first opening, at least one guide extending from the fist opening and the at least one gripping element;

each at least one gripping element including a body portion adapted for engaging the workpiece, an arm portion configured to engage one of said at least one guide and a force transfer element contiguous with the arm portion;

the second element including an actuation portion having a second opening concentric with the first opening and at least one slot disposed adjacent the second opening, each said at least one slot having a first section configured to engage the force transfer element of one said at least one gripping element, such that movement of the second element with respect to the first element actuates each at least one first section to contact and move each respective force transfer element thereby actuating each said at least one gripping element along respective said at least one guide.

4. The gripping tool as recited in claim **3**, wherein a spacer interconnects the elements to define a pocket such that a spring disposed within the pocket contacts the second element so that the second element is normally disposed in an open position.

5. An adjustable gripping tool for engaging a workpiece to impart work thereto, the tool comprising:

a first element and a second element connected for relative angular movement which generates movement of at least one gripping element;

the first element including a gripping portion configured to engage the workpiece including a first opening, at least one guide extending from the first opening and the at least one gripping element;

each at least one gripping element including a body portion adapted for engaging the workpiece, an arm portion configured to engage one of said at least one guide and a force transfer element contiguous with the arm portion;

wherein the aim portion of the gripping elements further includes a pair of arms disposed at opposite ends of the body portion such that the gripping elements are substantially U-shaped;

the second element including an actuation portion having a second opening concentric with the first opening and at least one slot disposed adjacent the second opening, each said at least one slot having a first section configured to engage the force transfer element of one said at least one gripping element, such that movement of the second element with respect to the first element actuates each at least one first section to contact and move each respective force transfer element thereby actuating each said at least one gripping element along respective said at least one guide.

6. The gripping tool as recited in claim **1**, wherein the first element further includes a plurality of studs such that one stud is disposed between an adjacent pair of guides and extends parallel to die force transfer elements.

7. The gripping tool as recited in claim **6**, wherein each of the slots further includes a second section extending from the first section, such that one of the studs engages one of the second sections so that during relative angular movement between the first element and the second element the first and second openings remain concentrically aligned.

8. The gripping tool as recited in claim **7**, wherein the first and second sections are divergent.

9. The gripping tool as recited in claim **1**, wherein the gripping portion and actuation portion circumferentially engage the workpiece.

10. The gripping tool as recited in claim **1**, wherein the griping portion and actuation portion are configured penannular.

11. The gripping tool as recited in claim **1**, wherein the gripping portion includes a plurality of gripping elements.

12. The gripping tool as recited in claim **3**, wherein a lock mechanism is connected to the first element between the elements such that movement of the lock mechanism from a first operative position to a second operative position secures the first ement and second element in a desired angular orientation.

13. An adjustable gripping tool for engaging a workpiece to impart work thereto, the tool comprising:

a first element and a second element connected for relative angular, movement which generates movement of at least one gripping element;

the first element including a gripping portion configured to engage the workpiece including a first opening, at least one guide extending from the first opening and the at least one gripping element;

each at least one gripping element including a body portion adapted for engaging the workpiece, an arm portion configured to engage one of said at least one guide and a force transfer element contiguous with the arm portion;

the second element including an actuation portion having a second opening concentric with the first opening and at least one slot disposed adjacent the second opening, each said at least one slot having a first section configured to engage the force transfer element of one said at least one gripping element, such that movement of the second element with respect to the first element actuates each at least one first section to contact and move each respective force transfer element thereby actuating each said at least one gripping element along respective said at least one guide;

wherein the gripping elements performing one function may be replaced with gripping elements performing a different function.

14. An adjustable gripping tool for engaging a workpiece to impart work thereto, the tool comprising:

a first element and a second element connected for relative angular movement which generates movement of at least one gripping element;

the first element including a gripping portion configured to engage the workpiece including a first opening, at least one guide extending from the first opening and the at least one gripping element;

each at least one griping element including a body portion adapted for engaging the workpiece, an arm portion configured to engage one of said at least one guide and a force transfer element contiguous with the arm portion;

the second element including an actuation portion having a second opening concentric with the first opening and at least one slot disposed adjacent the second opening, each said at least one slot having a first section configured to engage the force transfer element of one said at least one gripping element, such that movement of the second element with respect to the first element actuates each at least one first section to contact and move each respective force transfer element thereby actuating each said at least one gripping element along respective said at least one guide;

wherein the gripping elements score and cut.

15. An adjustable gripping tool for engaging a workpiece to impart work thereto, the tool comprising:

a first element and a second element connected for relative angular movement which generates movement of at least one gripping element;

the first element including a gripping portion configured to engage the workpiece including a first opening, at least one de extending from the first opening and the at least one gripping element;

each at least one gripping element including a body portion adapted for engaging the workpiece, an arm portion configured to engage one of said at least one guide and a force transfer element contiguous with the arm portion;

the second element including an actuation portion having a second opening concentric with the first opening and at least one slot disposed adjacent the second opening each said at least one slot having a first section configured to engage the force transfer element of one said at least one gripping element, such that movement of the second element with respect to the first element actuates each at least one first section to contact and move each respective force transfer element thereby actuating each said at least one gripping element along respective said at least one guide;

wherein movement of the at least one gripping element is linear.

16. An adjustable gripping tool for engaging a workpiece to impart work thereto, the tool comprising:

a first element and a second element connected for relative angular movement which generates movement of at least one gripping element;

the first element including a gripping portion configured to engage the workpiece including a first opening, at least one guide extending from the first opening and the at least one gripping element;

each at least one gripping element including a body portion adapted for engaging the workpiece, an arm portion configured to engage one of said at least one guide and a force transfer element contiguous with the arm portion;

the second element including an actuation portion having a second opening concentric with the first opening and at least one slot disposed adjacent the second opening, each said at least one slot having a first section configured to engage the force transfer element of one said at least one gripping element, such that movement of the second element with respect to the first element actuates each at least one first section to contact and move each respective force transfer element thereby actuating each said at least one gripping element along respective said at least one guide;

wherein movement of the at least one gripping element in curvilinear.

17. The gripping tool recited in claim **1**, wherein the at least one guide includes a plurality of guides.

18. The gripping tool as recited in claim **1**, wherein each at least one guide extends radially.

19. The gripping tool as recited in claim **1**, wherein each at least one guide extends along a curvilinear path.

20. An adjustable gripping tool for engaging a workpiece to impart work thereto, the tool comprising:

a first element and a second element connected for relative angular movement;

the second element including an actuation portion having a plurality of slots, each of the slots including a first section and a second section wherein the first and second sections each define divergent paths;

the first element including a gripping portion having a plurality of gripping elements, each gripping element having a force transfer element contiguous therewith, and at least one aligning element, where one of the aligning elements if disposed between a pair of gripping elements;

wherein one of the force transfer elements engages one first section and one of the aligning elements engages one second section such that movement of the second element relative to the first element results in the first sections contacting each of the aligning elements to actuate the gripping elements and the second sections contacting the aligning elements to maintain orientation of first element with respect to second element.

21. The gripping tool recited in claim **20**, wherein the first element includes a first opening and the second element includes a second opening which are concentrically aligned during relative movement.

22. The gripping tool recited, in claim **20**, wherein a lock mechanism is disposed on the fist element operative to secure the first element and second element in a desired angular orientation.

23. The gripping tool recited in claim **20**, wherein the gripping portion and actuation portion circumferentially engage the workpiece.

24. The gripping tool recited in claim **20**, wherein the gripping portion and actuation portion are configured pen-annular.

25. An adjustable gripping tool for engaging a workpiece to impart work thereto, the tool comprising:

a first element and a second element connected for relative angular movement;

the second element including an actuation portion having a plurality of slots, each of the slots including a first section and a second section wherein the first and second sections each define divergent paths;

the first element including a gripping portion having a plurality of gripping elements, each gripping element having force transfer element contiguous therewith, and at least one aligning element, where one of the aligning elements if disposed between a pair of gripping elements;

wherein the gripping elements performing one function may be replaced with gripping elements performing a different function;

wherein one of the force transfer elements engages one first section and one of the aligning elements engages one second section such that movement of the second element relative to the first element results in the first

sections contacting each of the aligning elements to actuate the gripping elements and the second sections contacting the aligning elements to maintain orientation of first element with respect to second element.

26. An adjustable gripping tool for engaging a workpiece to impart work thereto, the tool comprising:

a first element and a second element connected for relative angular movement;

the second element including an actuation portion having a plurality of slots, each of the slots including a first section and a second section wherein the first and second sections each define divergent paths;

the first element including a gripping portion having a plurality of gripping elements, each gripping element having a force transfer element contiguous therewith, and at least one aligning element, where one of the aligning elements if disposed between a pair of gripping elements;

wherein the gripping element can score and cut;

wherein one of the force transfer elements engages one first section and one of the aligning elements engages one second section such that movement of the second element relative to the first element results in the first sections contacting each of the aligning elements to actuate the gripping elements and the second sections contacting the aligning elements to maintain orientation of first element with respect to second element.

* * * * *

UNITED STATES PATENT AND TRADEMARK OFFICE

CERTIFICATE OF CORRECTION

PATENT NO. : 6,889,579 B1
APPLICATION NO. : 10/763489
DATED : May 10, 2005
INVENTOR(S) : Daniel P. Brown

It is certified that error appears in the above-identified patent and that said Letters Patent is hereby corrected as shown below:

Col. 9, Line 1, Claim 1: Delete “grinning” and replace with “gripping”

Signed and Sealed this
Seventeenth Day of July, 2012

David J. Kappos

David J. Kappos
Director of the United States Patent and Trademark Office

EXHIBIT B

US007992470B2

(12) **United States Patent**
Brown

(10) **Patent No.: US 7,992,470 B2**
(45) **Date of Patent: *Aug. 9, 2011**

(54) **ADJUSTABLE GRIPPING TOOL**

(75) Inventor: **Daniel P. Brown**, Palos Park, IL (US)

(73) Assignee: **Loggerhead Tools, LLC**, Palos Park, IL (US)

(*) Notice: Subject to any disclaimer, the term of this patent is extended or adjusted under 35 U.S.C. 154(b) by 1071 days.

This patent is subject to a terminal disclaimer.

(21) Appl. No.: **11/102,966**

(22) Filed: **Apr. 11, 2005**

(65) **Prior Publication Data**

US 2005/0193873 A1 Sep. 8, 2005

Related U.S. Application Data

(63) Continuation-in-part of application No. 10/763,489, filed on Jan. 23, 2004, now Pat. No. 6,889,579.

(51) **Int. Cl.**
B25B 13/18 (2006.01)
B25B 13/48 (2006.01)

(52) **U.S. Cl.** **81/90.2**; 81/90.1; 81/58

(58) **Field of Classification Search** 81/90.2, 81/58, 90.1, 90.3, 90.5, 91.1, 126, 128
See application file for complete search history.

(56) **References Cited**

U.S. PATENT DOCUMENTS

599,837	A		3/1898	Harris
877,773	A		4/1908	Holm
912,117	A		2/1909	Green
1,393,267	A		10/1921	Cousins
2,096,016	A		10/1937	Welshampel
2,292,391	A		8/1942	Merriman et al.
2,409,549	A		10/1946	Djidics
2,547,534	A		4/1951	Oliver
2,573,421	A	*	10/1951	Feiring 81/318
2,580,247	A		12/1951	Secondi et al.
2,674,911	A	*	4/1954	Theis 81/3.44
2,687,661	A	*	8/1954	Richardson 81/352
2,714,827	A		8/1955	Kusiv et al.
2,739,381	A		3/1956	Petersen
2,753,742	A		7/1956	Buchanan
2,787,925	A	*	4/1957	Buchanan et al. 72/402
2,884,826	A		5/1959	Bruhn
3,177,695	A		4/1965	Van Oort

(Continued)

FOREIGN PATENT DOCUMENTS

DE 2801881 1/1979

(Continued)

OTHER PUBLICATIONS

Nagel, Matthew, Examination Report for New Zealand Patent Application No. 562104, Aug. 7, 2009, Intellectual Property Office of New Zealand.

(Continued)

Primary Examiner — David B Thomas
(74) *Attorney, Agent, or Firm* — Vedder Price P.C.

(57) **ABSTRACT**

A self-energizing and de-energizing adjustable gripping tool for engaging a work piece to impart work thereto includes a first element and second element connected for relative movement. The second element includes an actuation portion having a plurality of slots. The first element includes gripping elements which are each associated with a force transfer element which engages one of the slots such that movement of the second element relative to the first element actuates the gripping elements to engage the work piece.

41 Claims, 24 Drawing Sheets

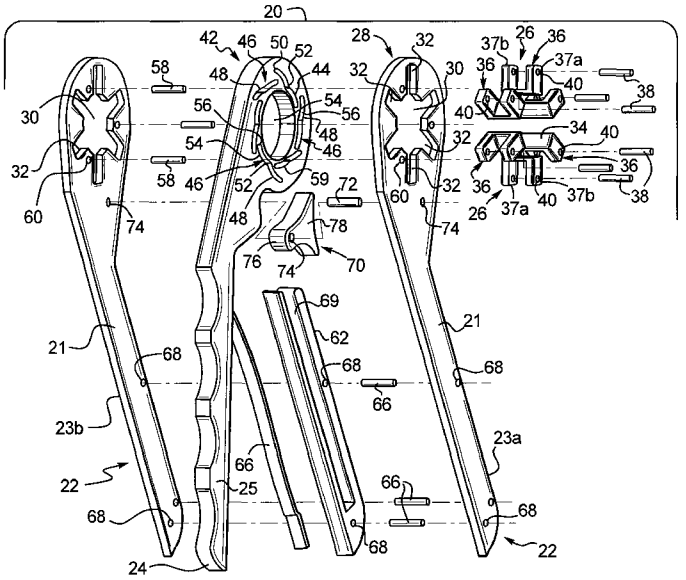

U.S. PATENT DOCUMENTS

3,199,334	A	*	8/1965	Holmes et al.	72/409.01
3,226,968	A		1/1966	Holmes	
3,624,682	A		11/1971	Kowal	
3,664,213	A		5/1972	Anati	
3,672,050	A		6/1972	Hanback	
3,713,322	A	*	1/1973	Fischer	72/409.09
3,901,107	A		8/1975	Halls	
4,080,733	A		3/1978	Clegg	
4,112,792	A		9/1978	Guimarin	
4,277,991	A		7/1981	Stubenrauch	
4,333,357	A		6/1982	Vinther	
4,542,668	A		9/1985	Wiener	
4,724,730	A		2/1988	Mader et al.	
4,770,070	A		9/1988	Sowers	
4,793,225	A		12/1988	Berkich	
4,813,309	A		3/1989	Kang	
4,847,997	A		7/1989	Petty	
4,858,316	A		8/1989	Dubey	
5,033,153	A		7/1991	Post	
5,067,376	A		11/1991	Fossella	
5,076,121	A		12/1991	Fossella	
5,090,273	A		2/1992	Fossella	
5,095,782	A	*	3/1992	Galea	81/127
5,206,996	A		5/1993	McDaniel	
5,207,129	A		5/1993	Fossella	
5,235,878	A		8/1993	Young	
5,249,487	A	*	10/1993	Armfield, IV	81/58
5,249,490	A	*	10/1993	Kennel	81/405
5,261,263	A		11/1993	Whitesell	
5,305,670	A		4/1994	Fossella et al.	
5,345,682	A		9/1994	Dubinsky et al.	
5,377,566	A		1/1995	Mandigo	
5,448,931	A		9/1995	Fossella	
5,515,609	A		5/1996	Sperti	
5,531,549	A		7/1996	Fossella	
5,557,993	A	*	9/1996	Austin	81/165
5,581,886	A		12/1996	Sesser et al.	
5,809,852	A	*	9/1998	Haskell	81/129
5,819,607	A		10/1998	Carnesi	
5,893,306	A		4/1999	Owoc	
5,894,768	A	*	4/1999	Malkin et al.	81/165
5,907,906	A		6/1999	Sweeney	
5,957,010	A		9/1999	Petts	
5,960,683	A	*	10/1999	Malkin et al.	81/165
6,073,522	A		6/2000	Carnesi	
6,098,506	A	*	8/2000	Clegg	81/170
6,164,107	A		12/2000	Korba, Jr.	
6,186,034	B1	*	2/2001	Lamons	81/177.9
6,227,076	B1		5/2001	Murray	
6,279,429	B1	*	8/2001	Boyer	81/159
6,314,842	B1	*	11/2001	Hsieh	81/170
6,341,544	B1		1/2002	Falzone	
6,401,340	B1		6/2002	King	
6,418,820	B1	*	7/2002	Lamond et al.	81/177.1
6,530,298	B1		3/2003	Steffe	
6,658,739	B1		12/2003	Huang	
6,751,867	B1		6/2004	Whyte	
6,834,569	B2	*	12/2004	Wang	81/133
2002/0144575	A1		10/2002	Niven	
2003/0121376	A1		7/2003	Huang	
2004/0025647	A1	*	2/2004	Wang	81/133

FOREIGN PATENT DOCUMENTS

EP	0 543 815	5/1992
JP	S50-87599	12/1948
JP	S56-30511	8/1954
JP	S57-181516	5/1956

OTHER PUBLICATIONS

European Patent Office, Supplementary European Search Report issued in connection with Patent Application No. EP06749895, mailed Aug. 17, 2010, 1 page.

* cited by examiner

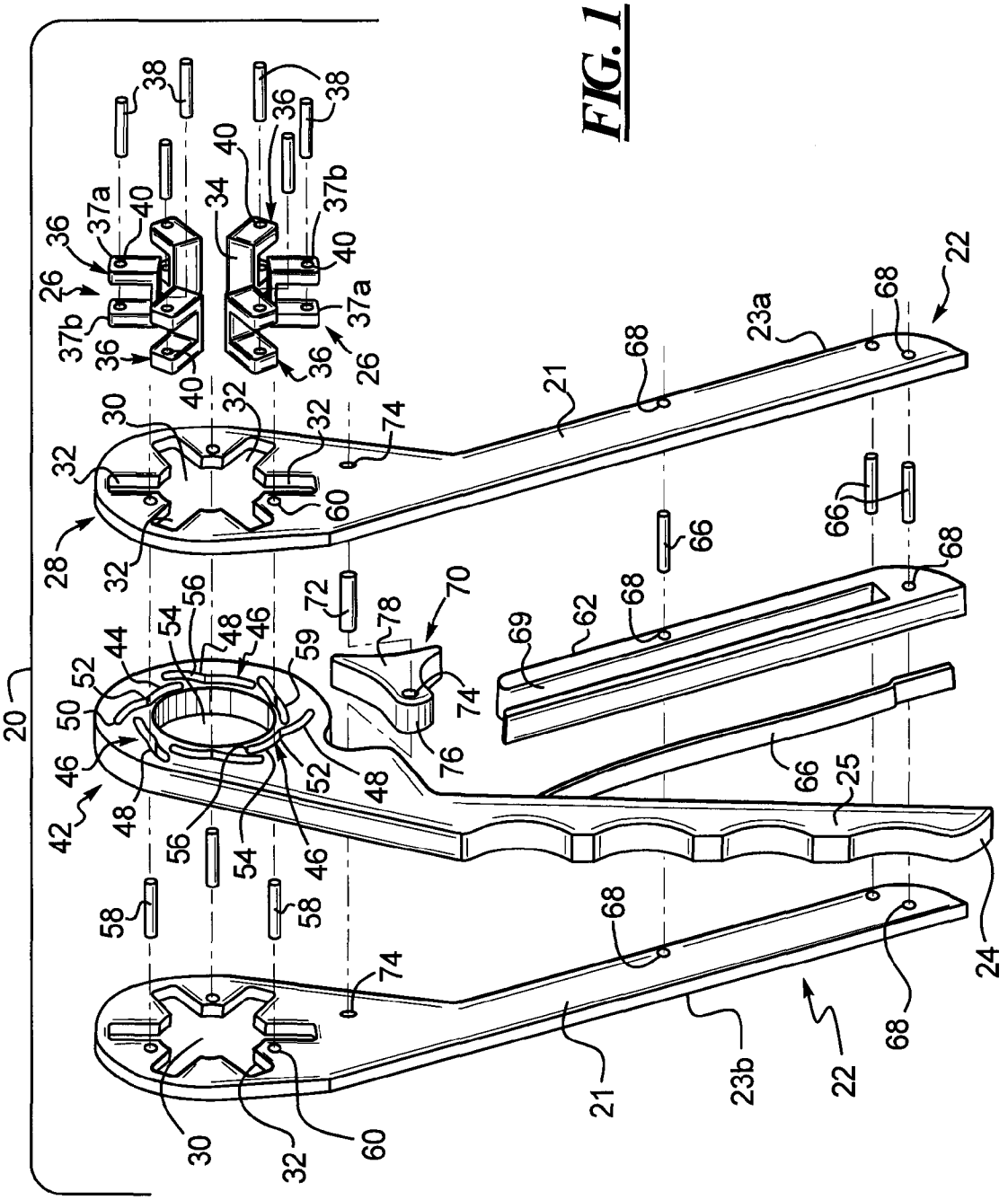
20
22
23a
23b
24
25
26
28
30
32
34
36
37a
37b
38
40
42
44
46
48
50
52
54
56
58
59
60
62
66
68
69
70
72
74
76
78

FIG. 1

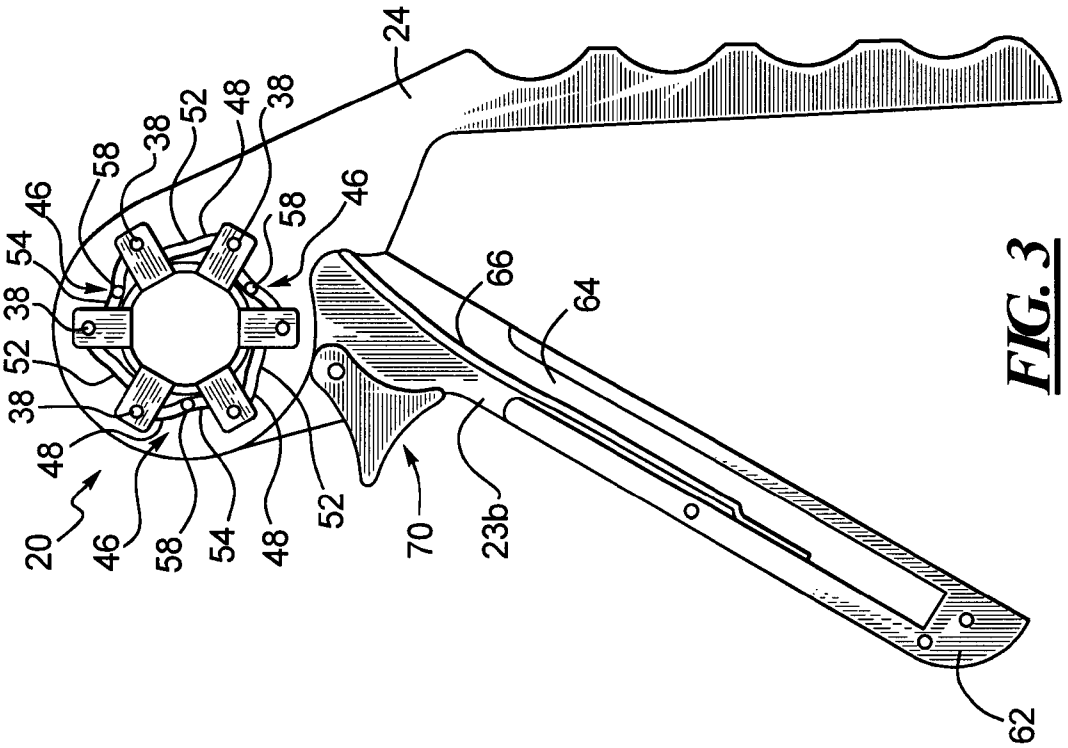
20
46
58
54
48
52
38
46
58
54
38
52
38
48
24
58
38
52
48
38
46
70
23b
66
64
62

FIG. 3

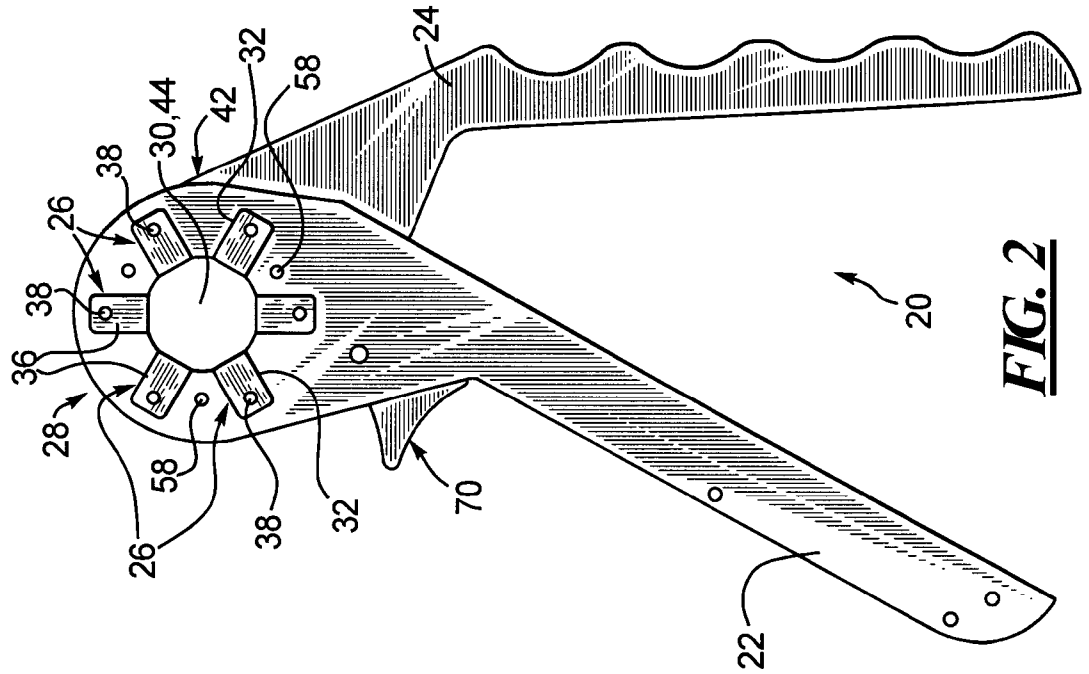
28
36
38
26
38
30,44
42
32
58
24
26
58
38
32
70
22
20

FIG. 2

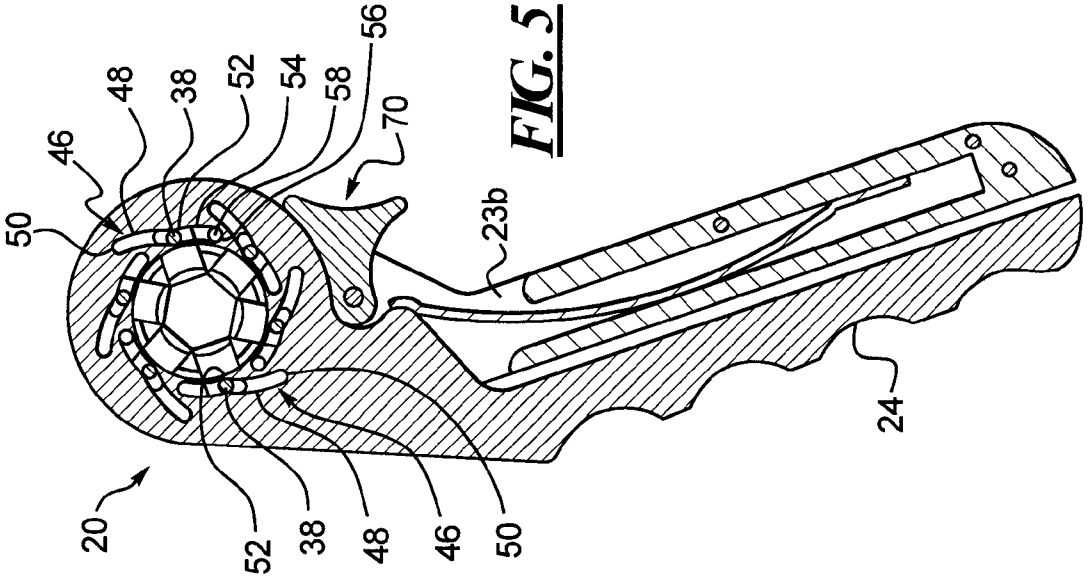

FIG. 5

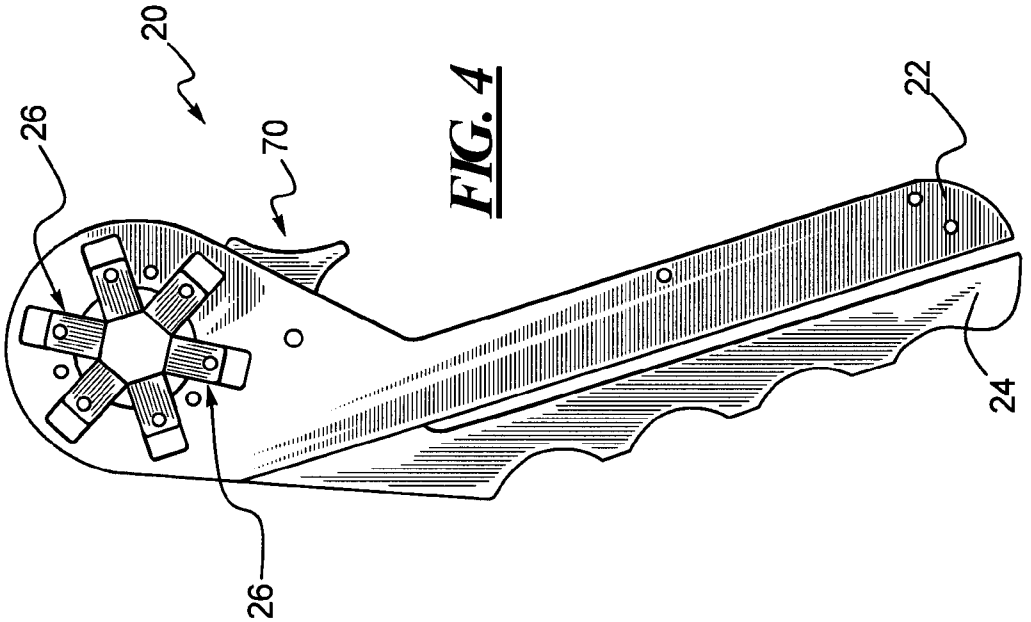

FIG. 4

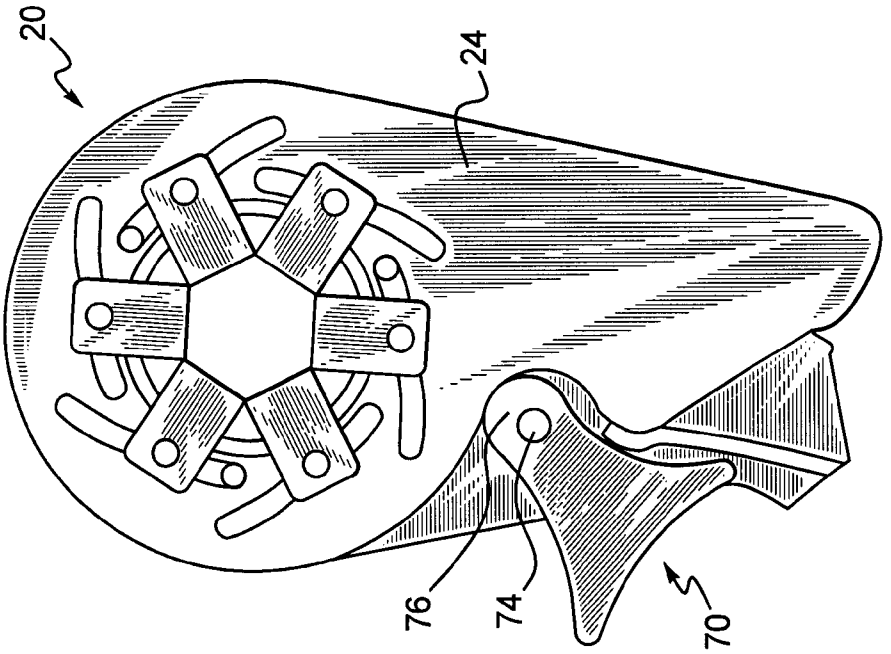

FIG. 7

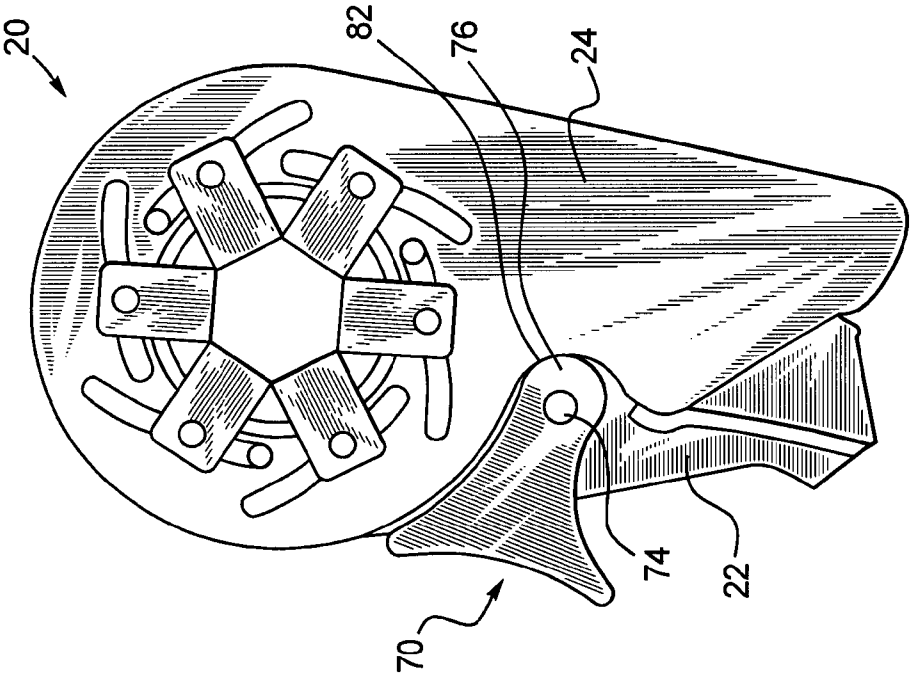

FIG. 6

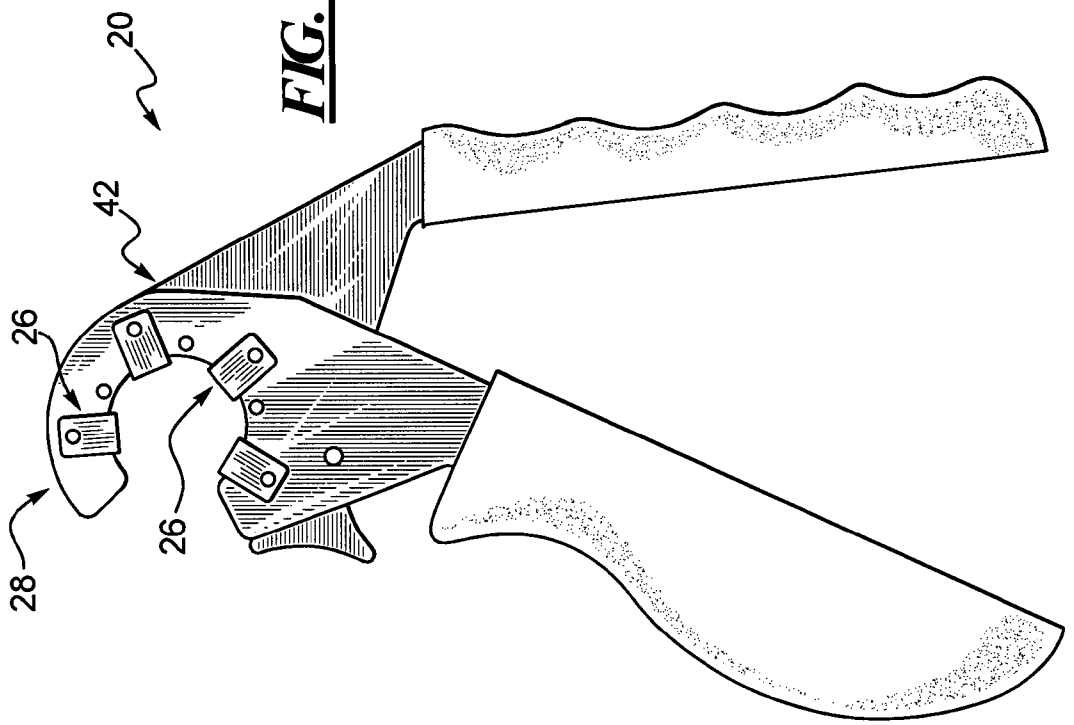

FIG. 9

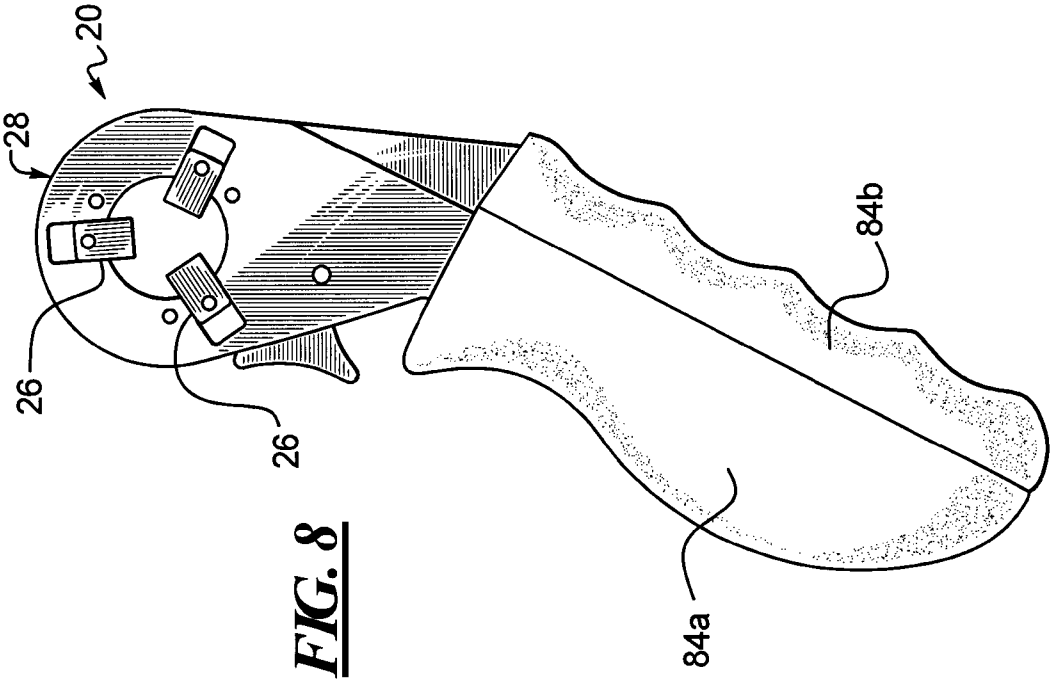

FIG. 8

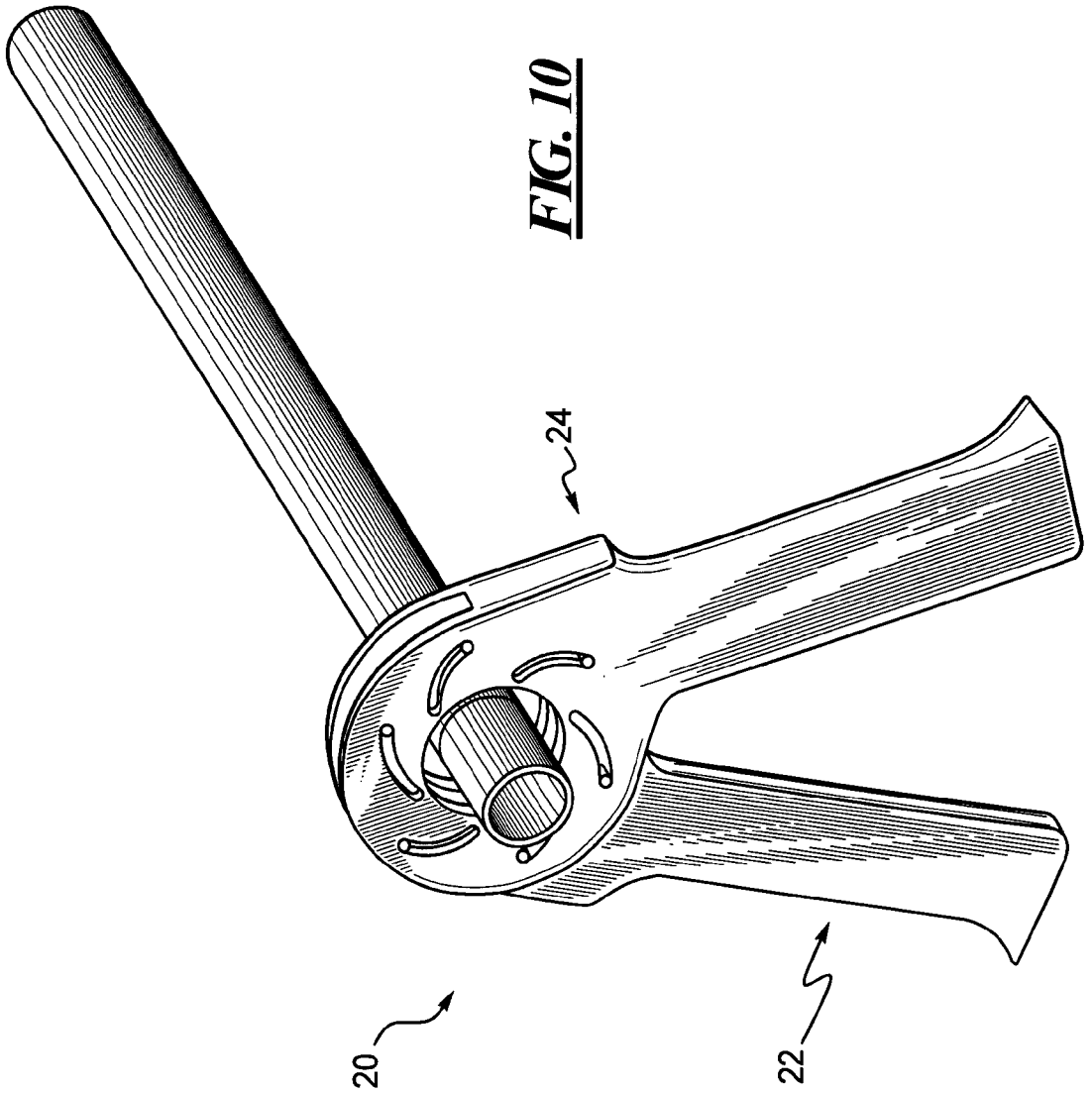

FIG. 10

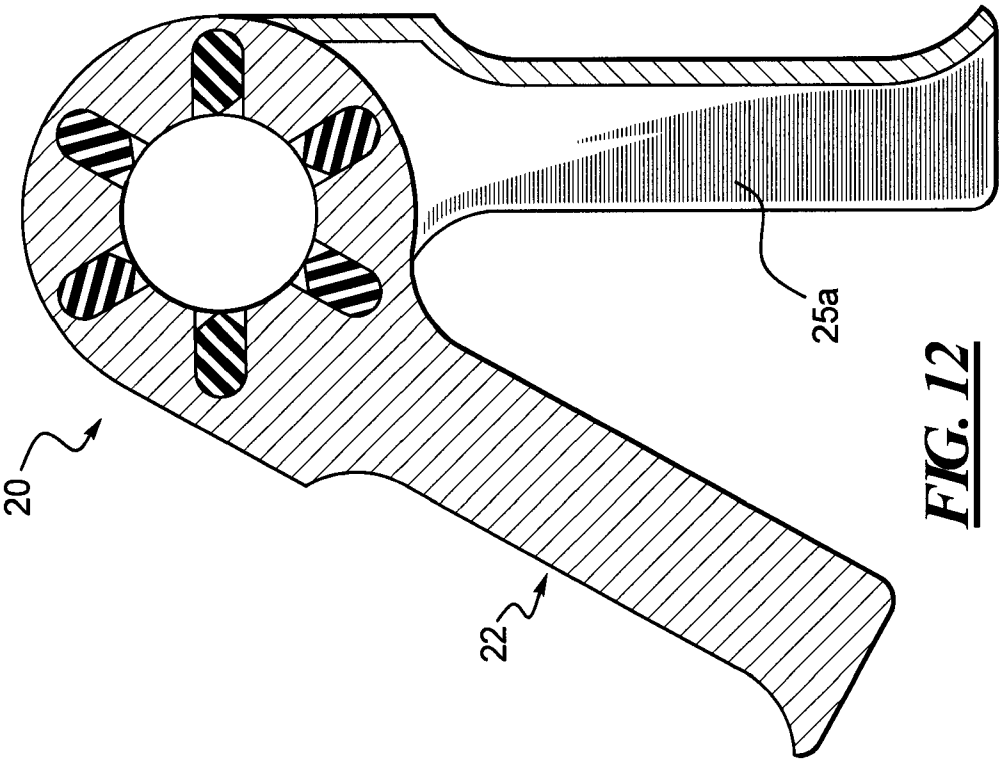

FIG. 12

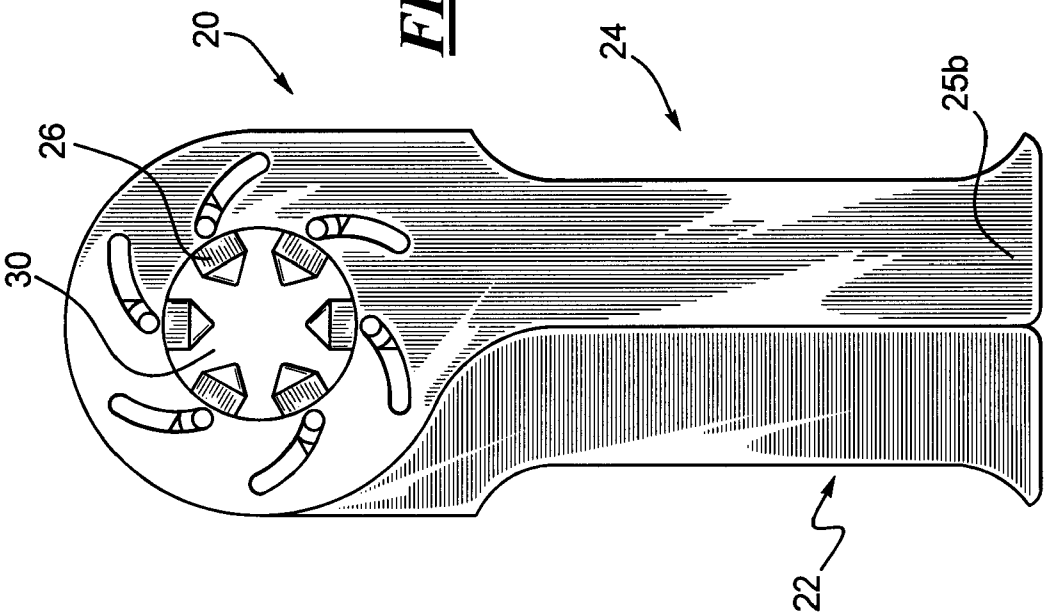

FIG. 11

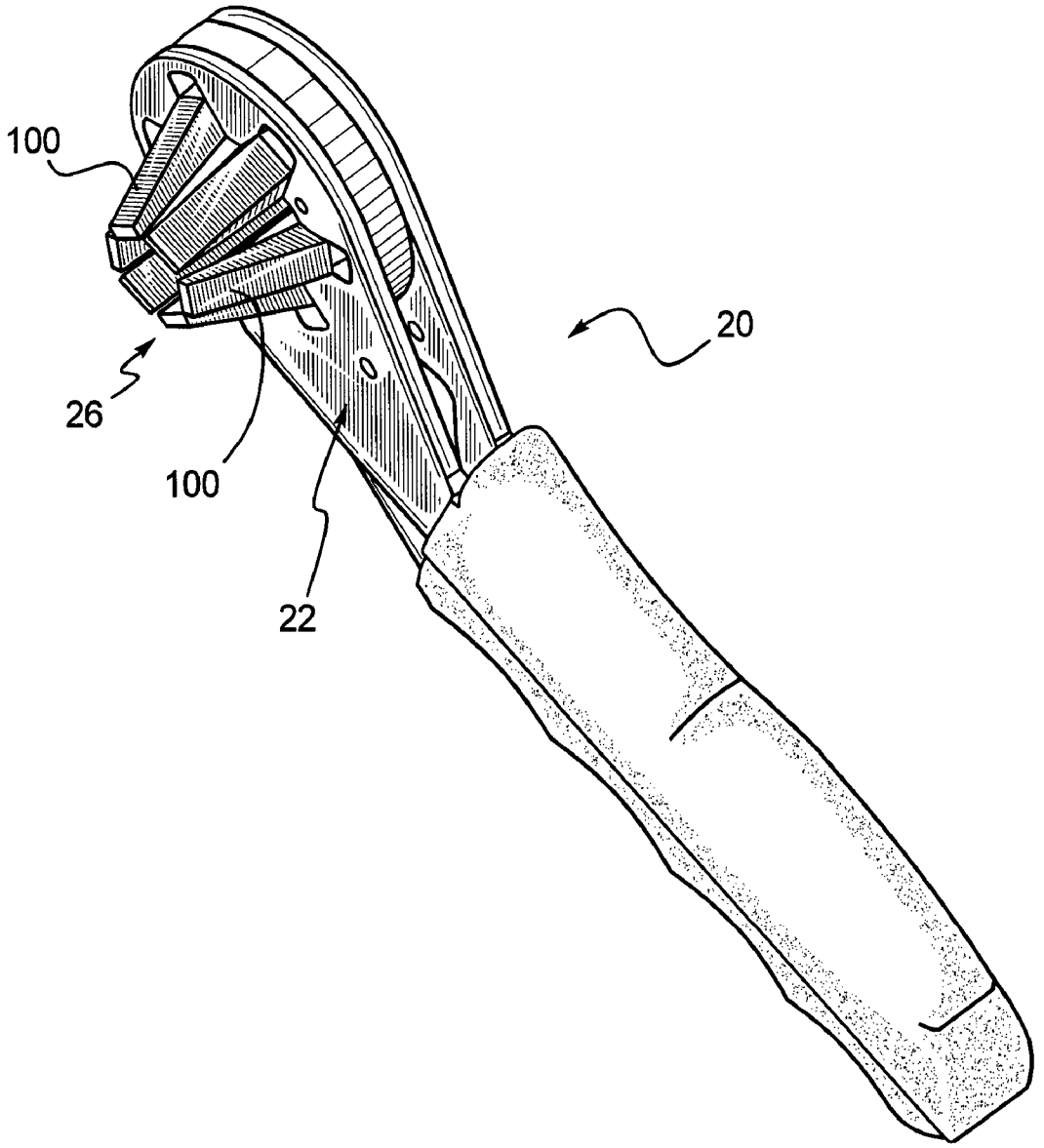

FIG. 13

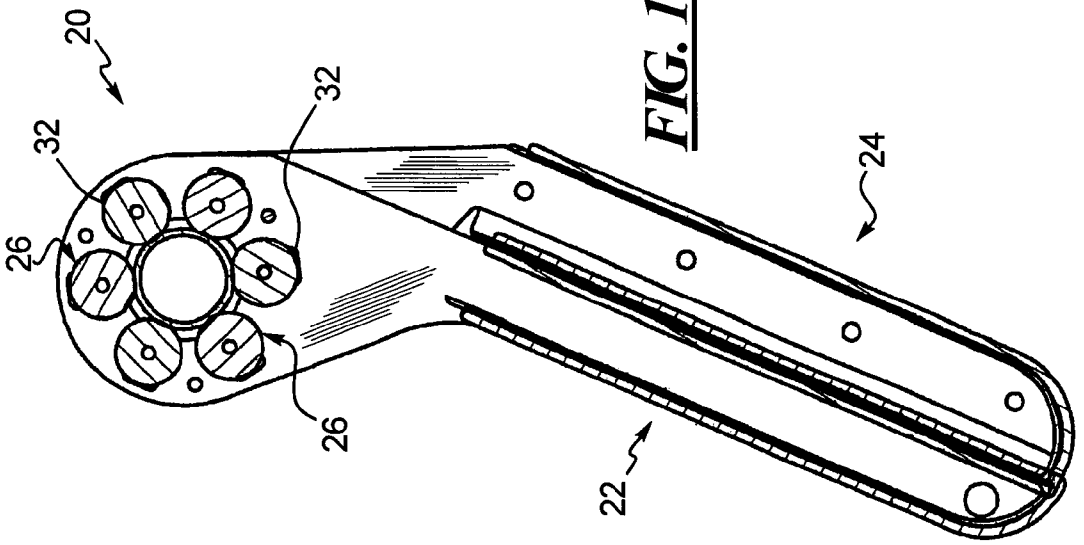

FIG. 15

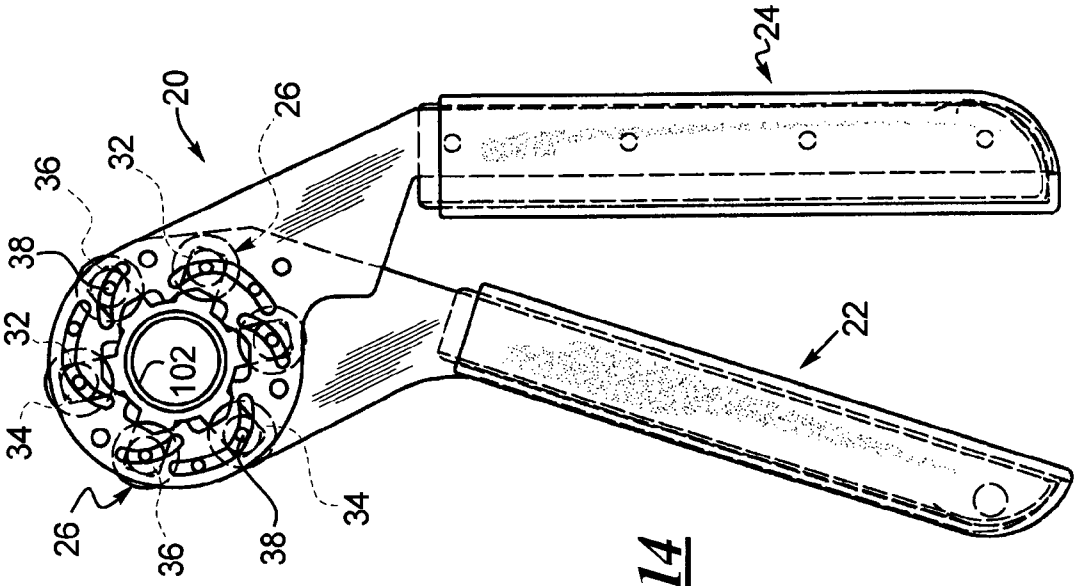

FIG. 14

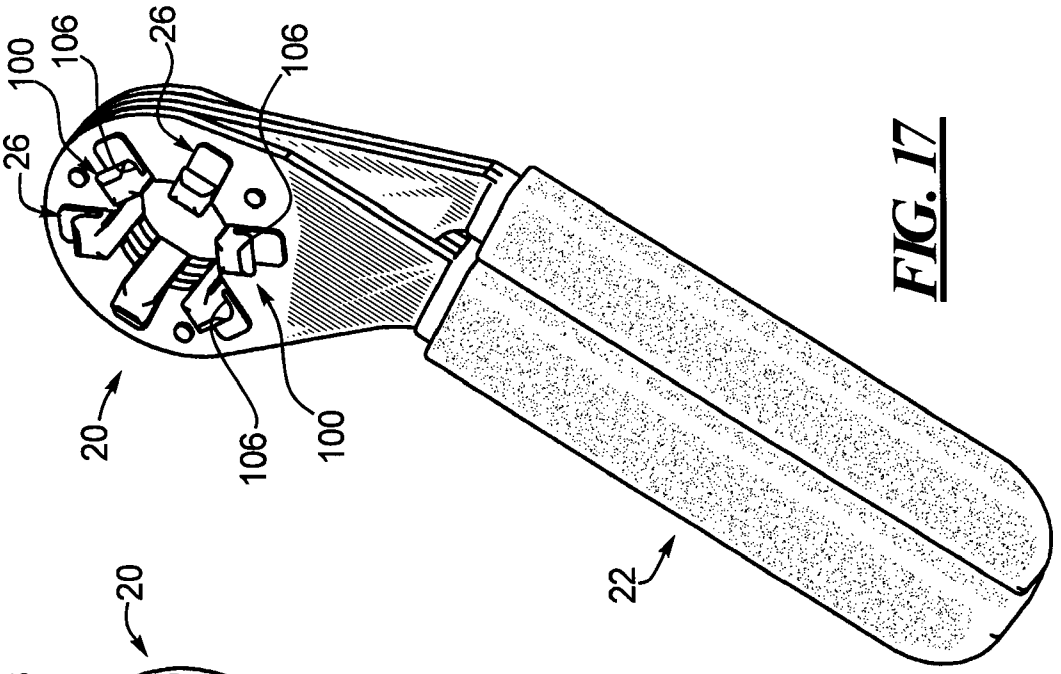

FIG. 17

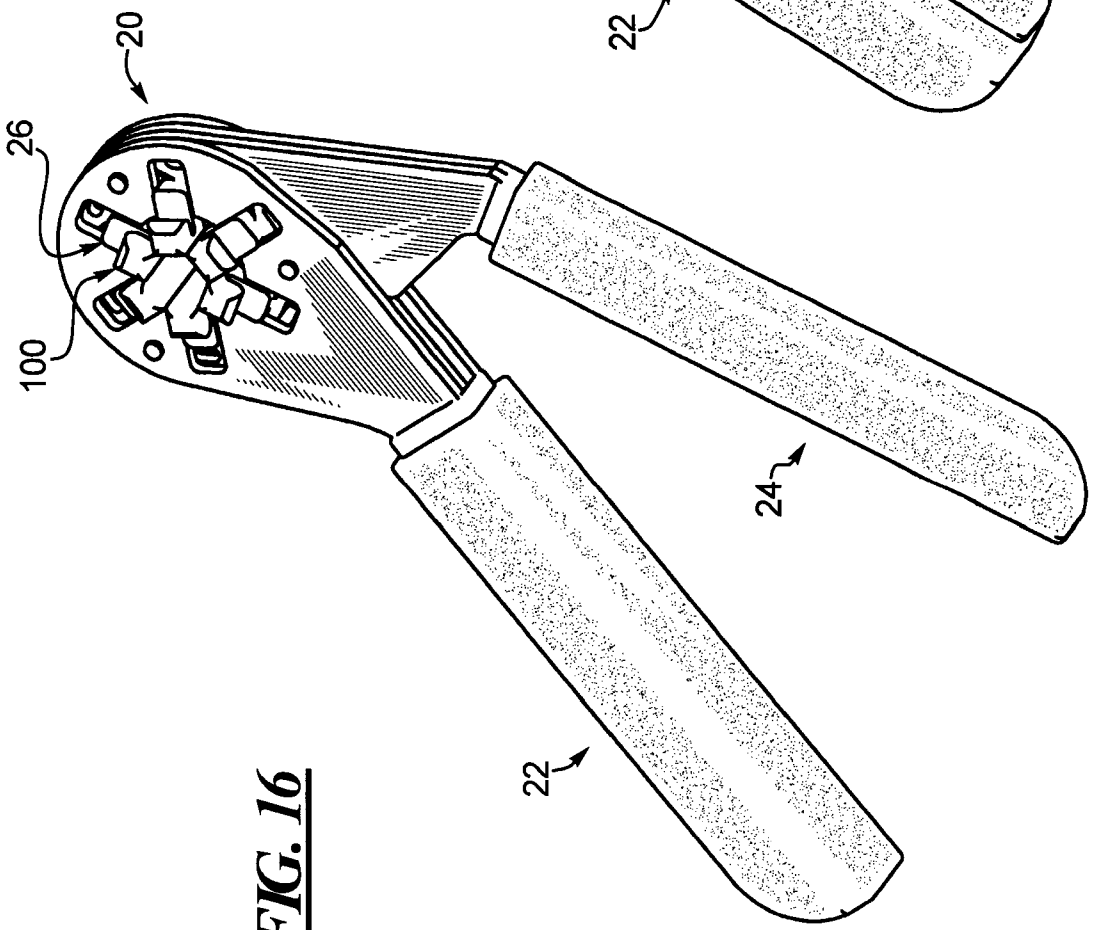

FIG. 16

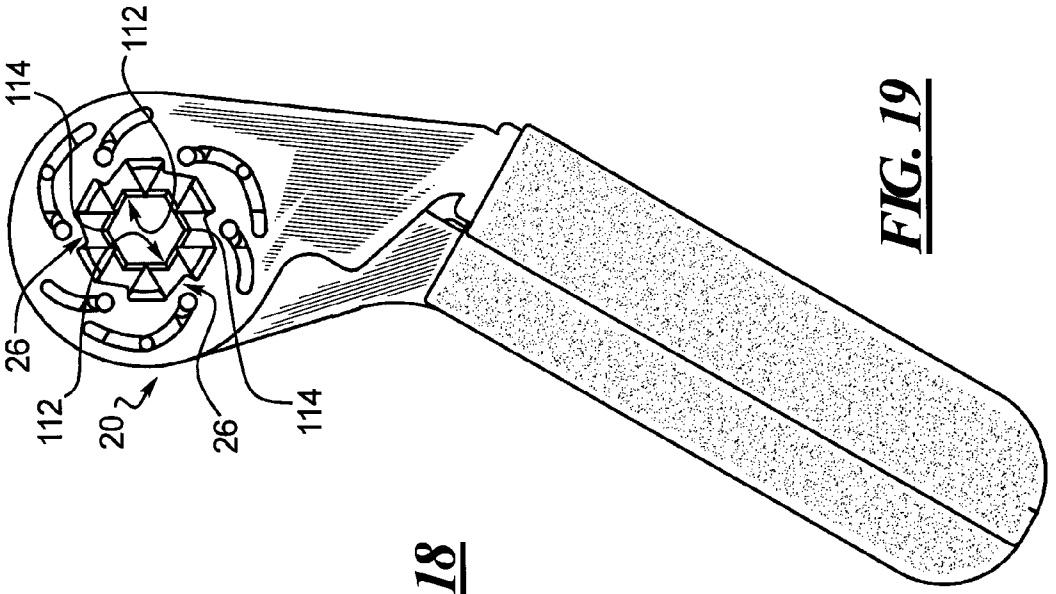

FIG. 19

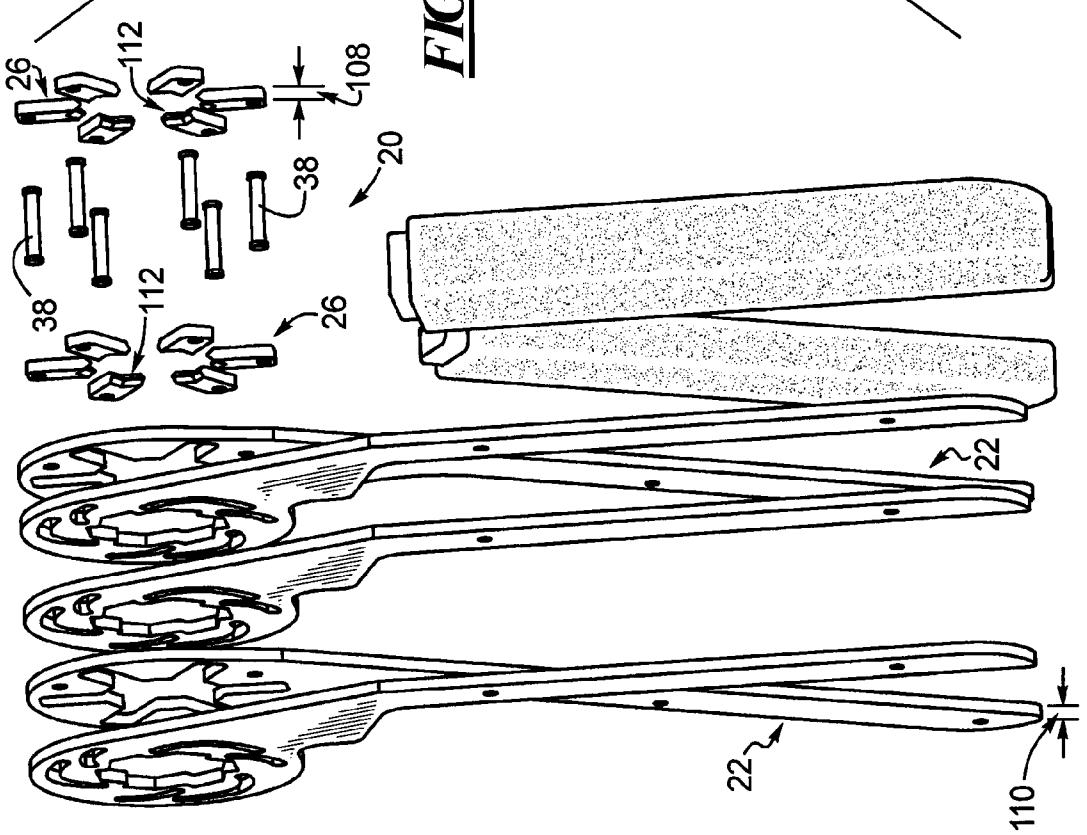

FIG. 18

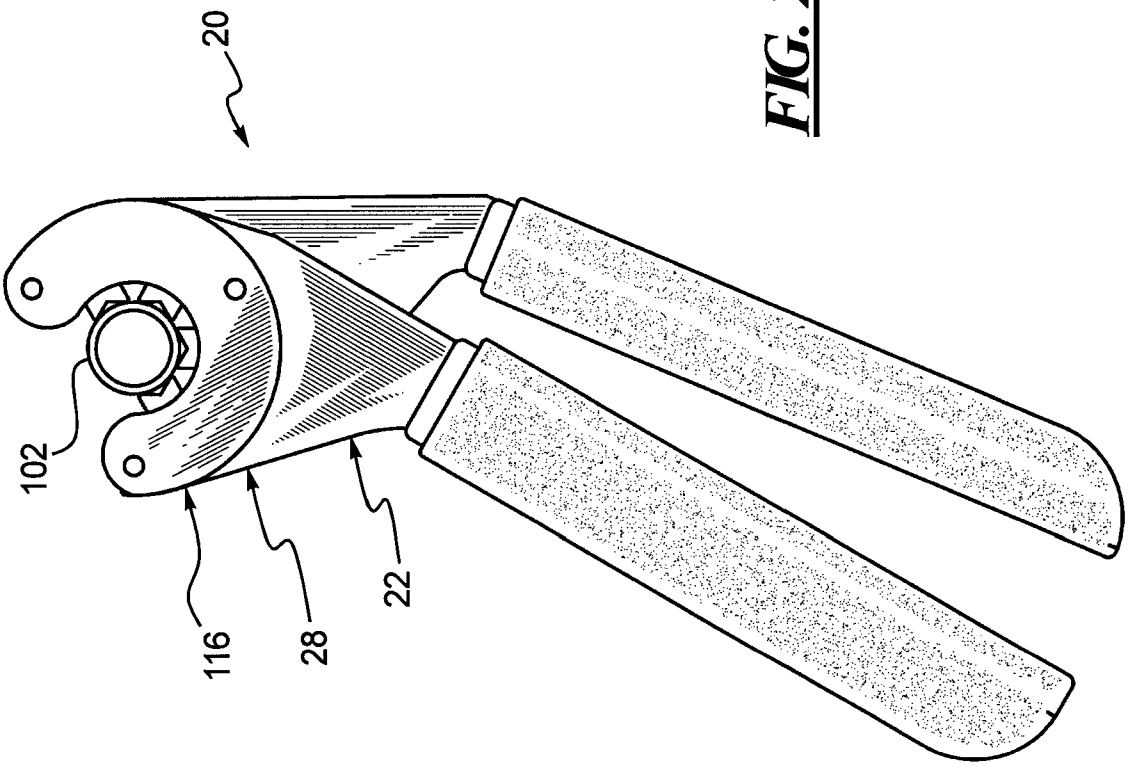

FIG. 20

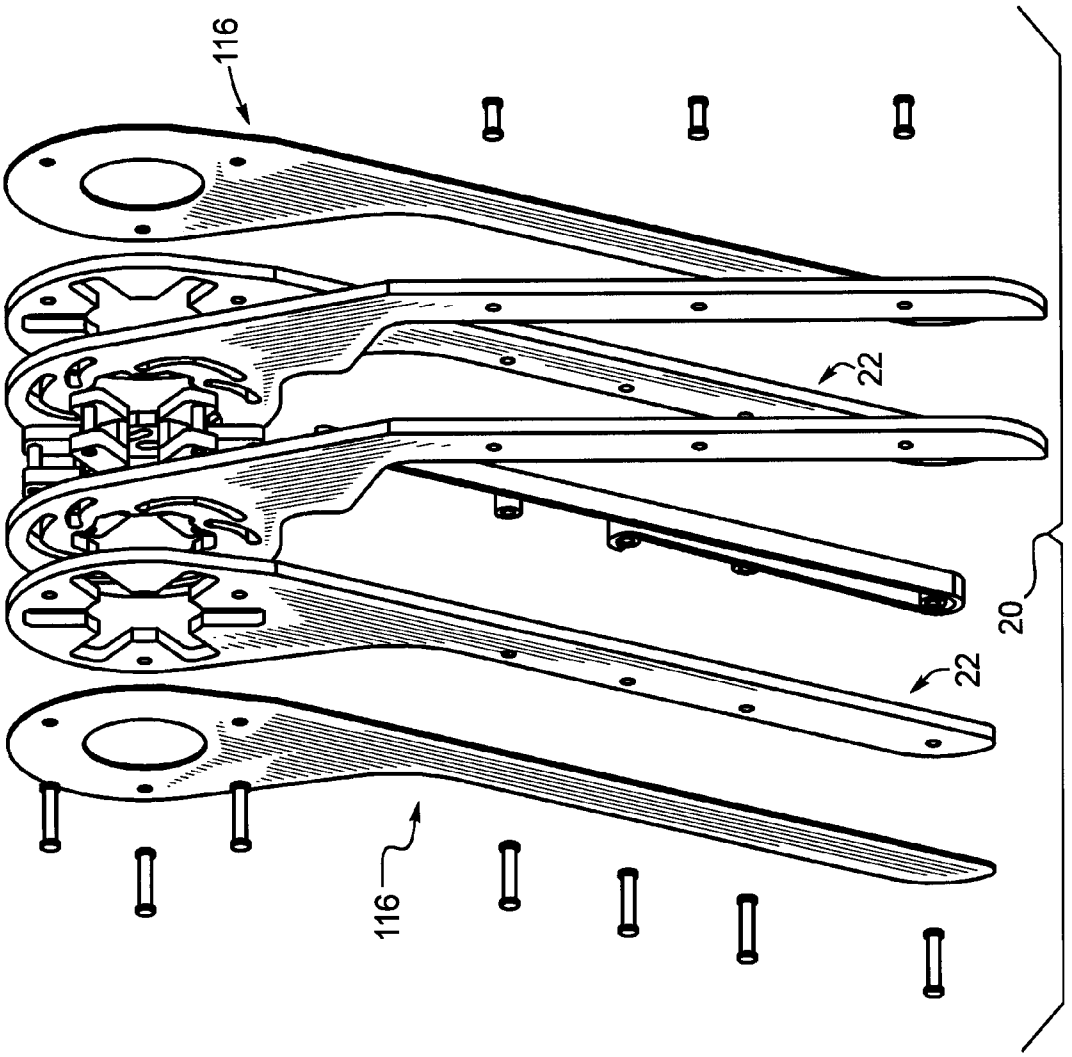

FIG. 21

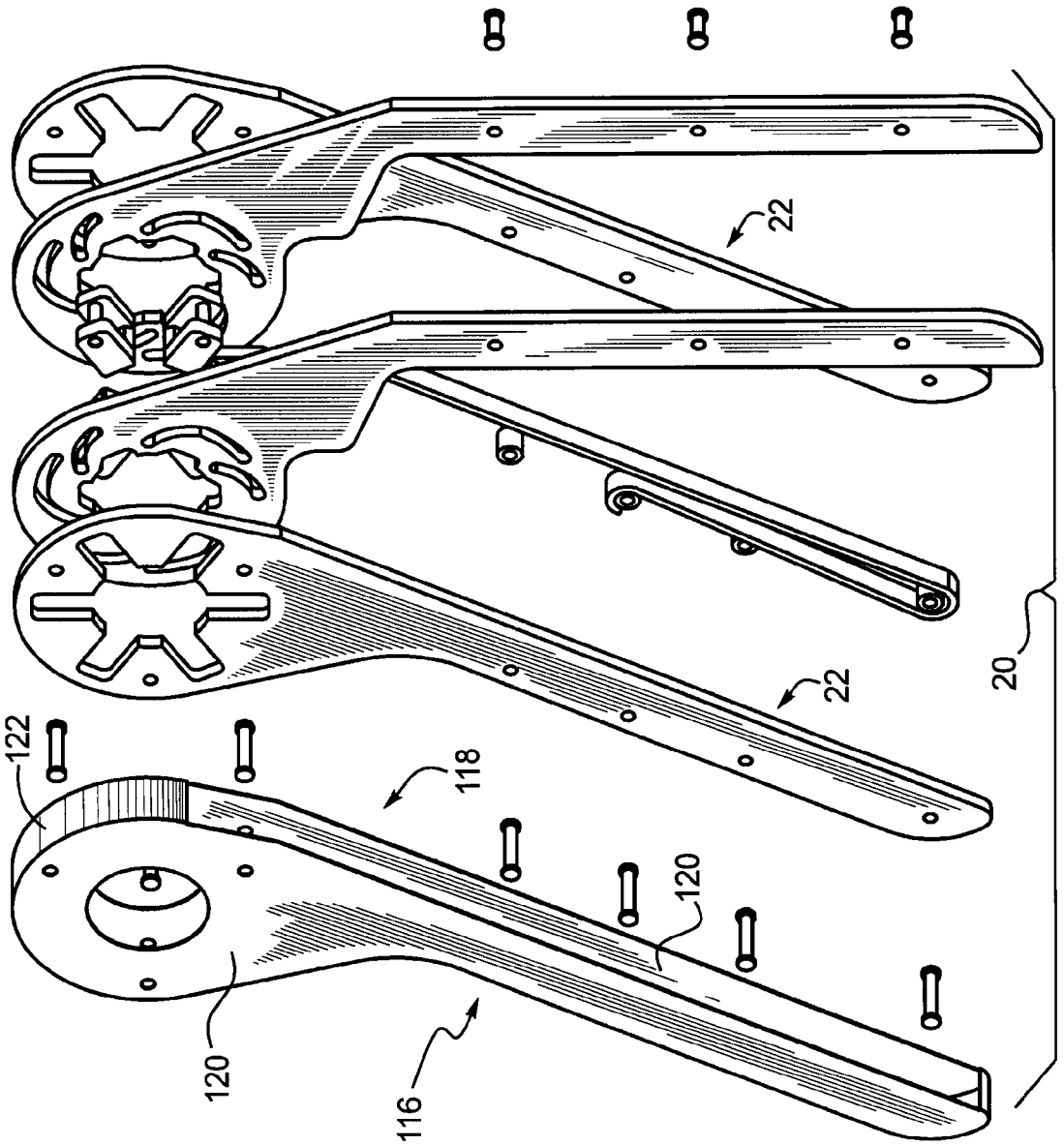

FIG. 22

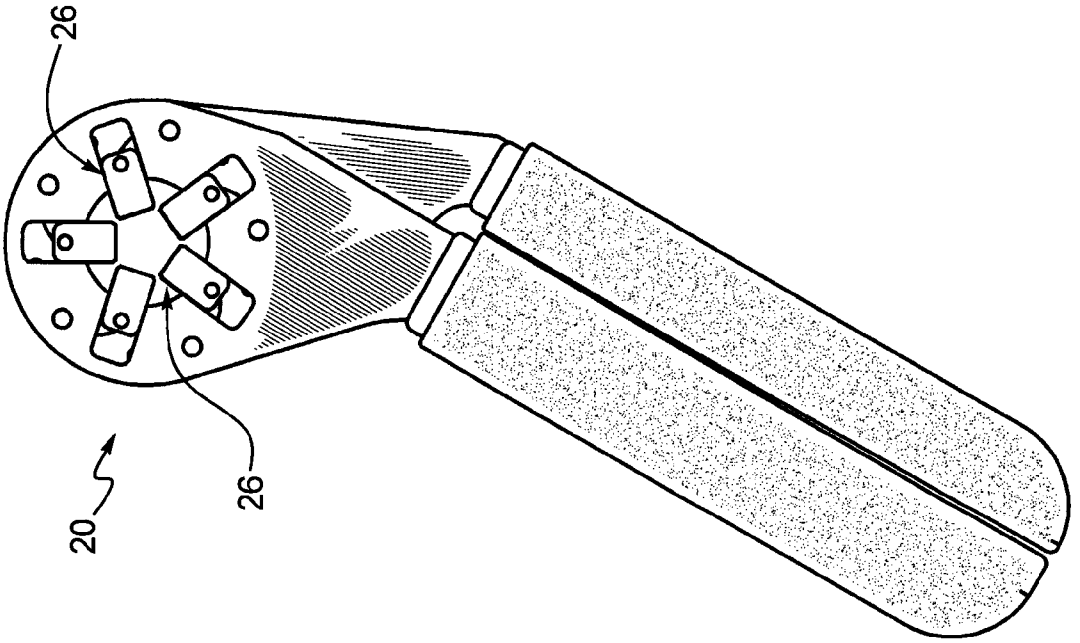

FIG. 23

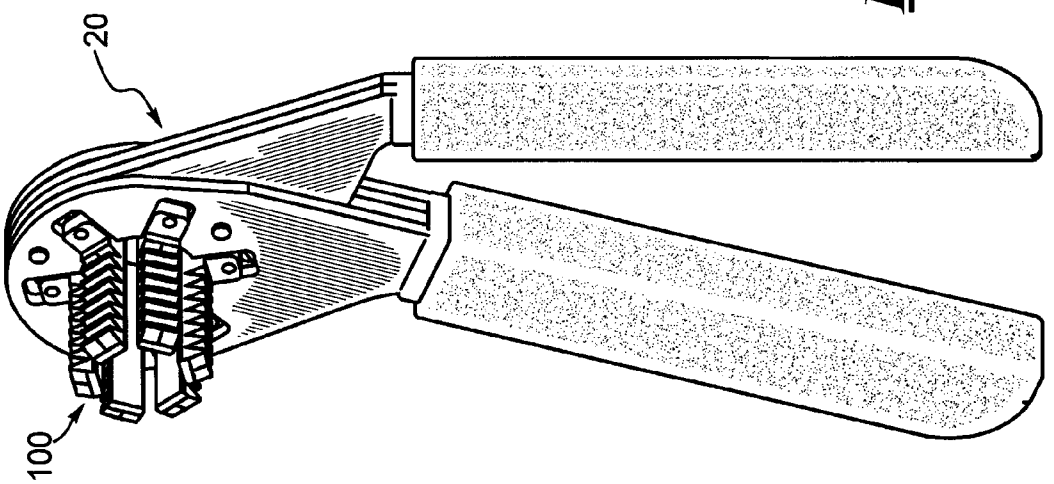

FIG. 25

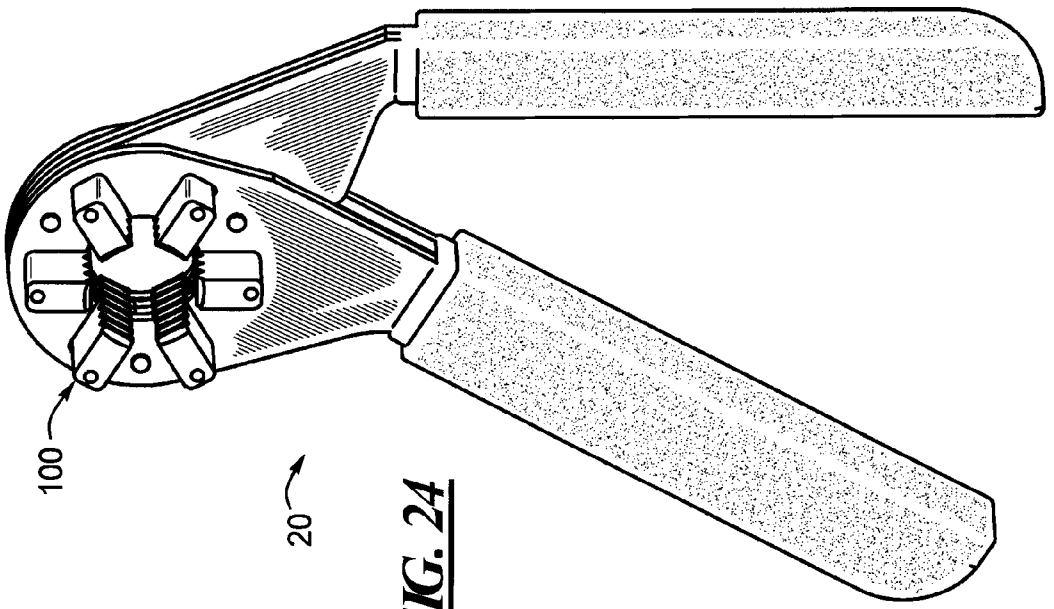

FIG. 24

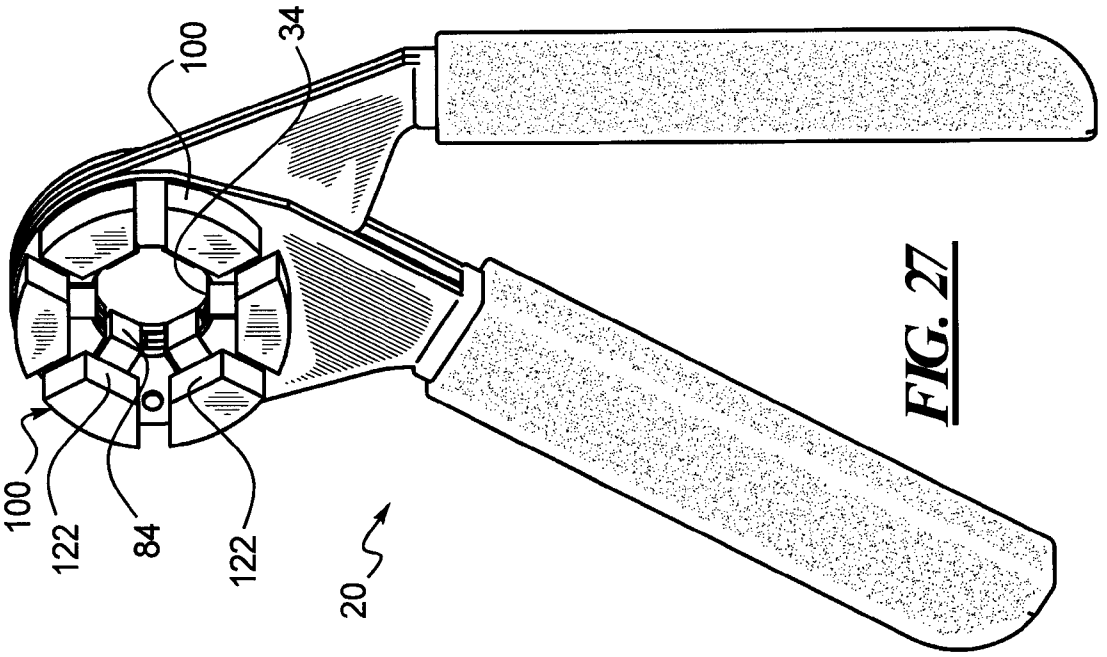

FIG. 27

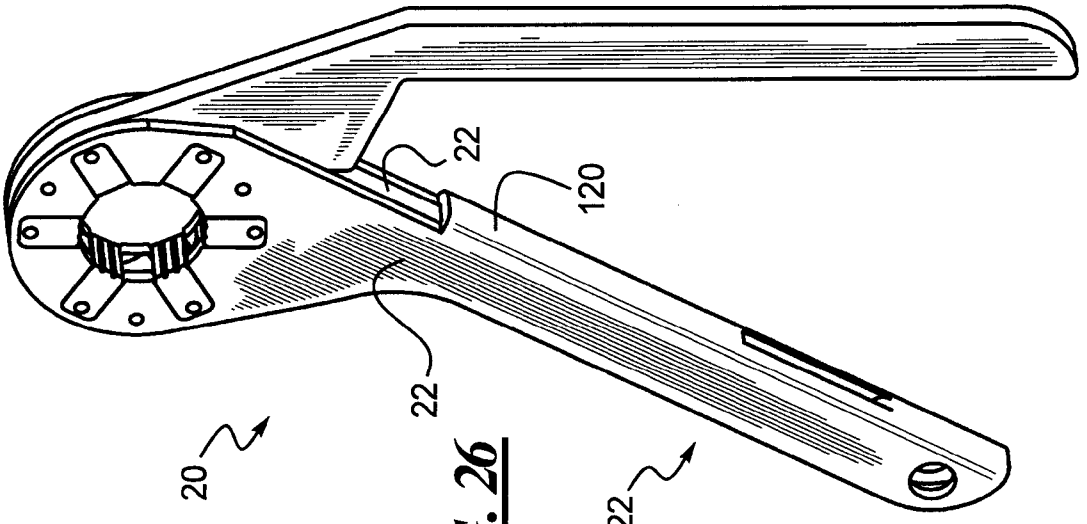

FIG. 26

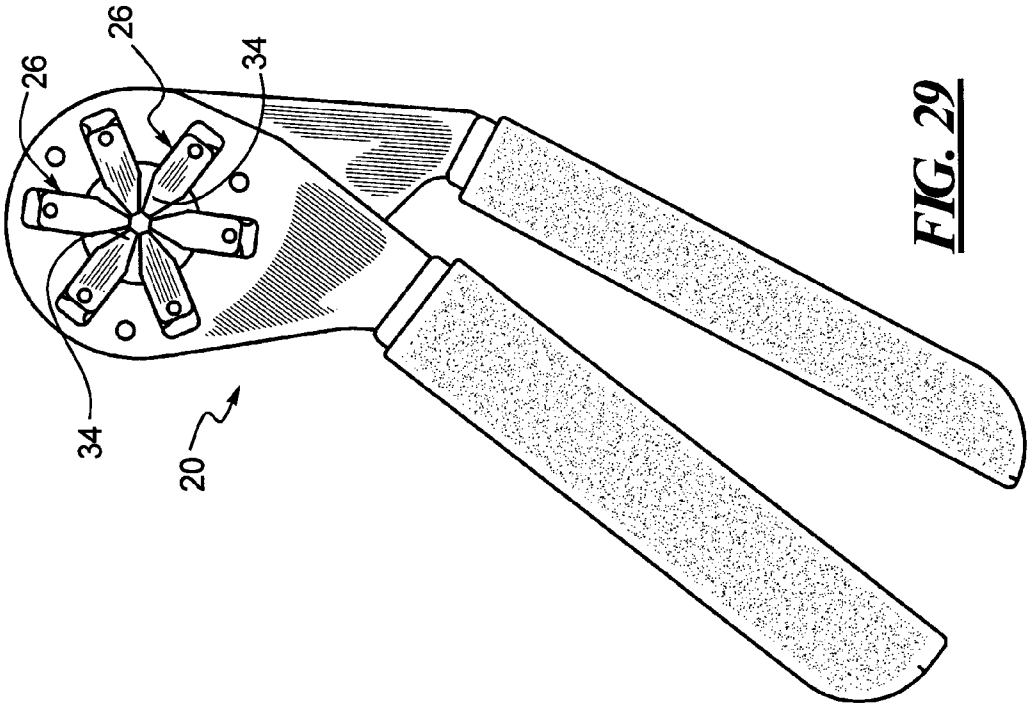

FIG. 29

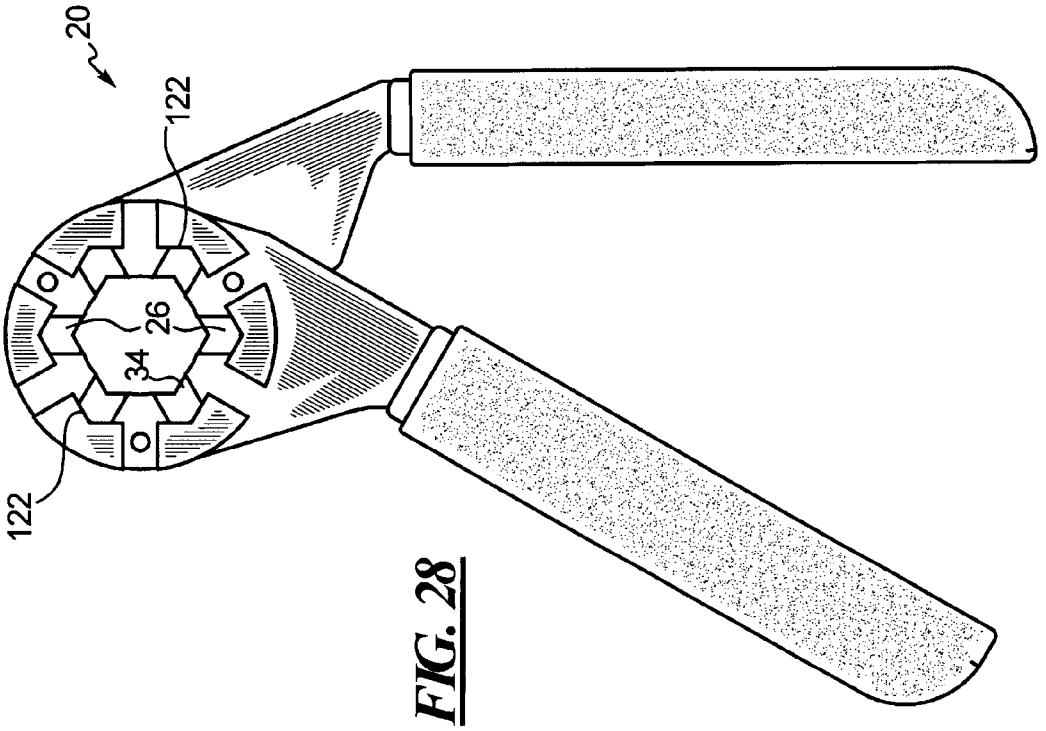

FIG. 28

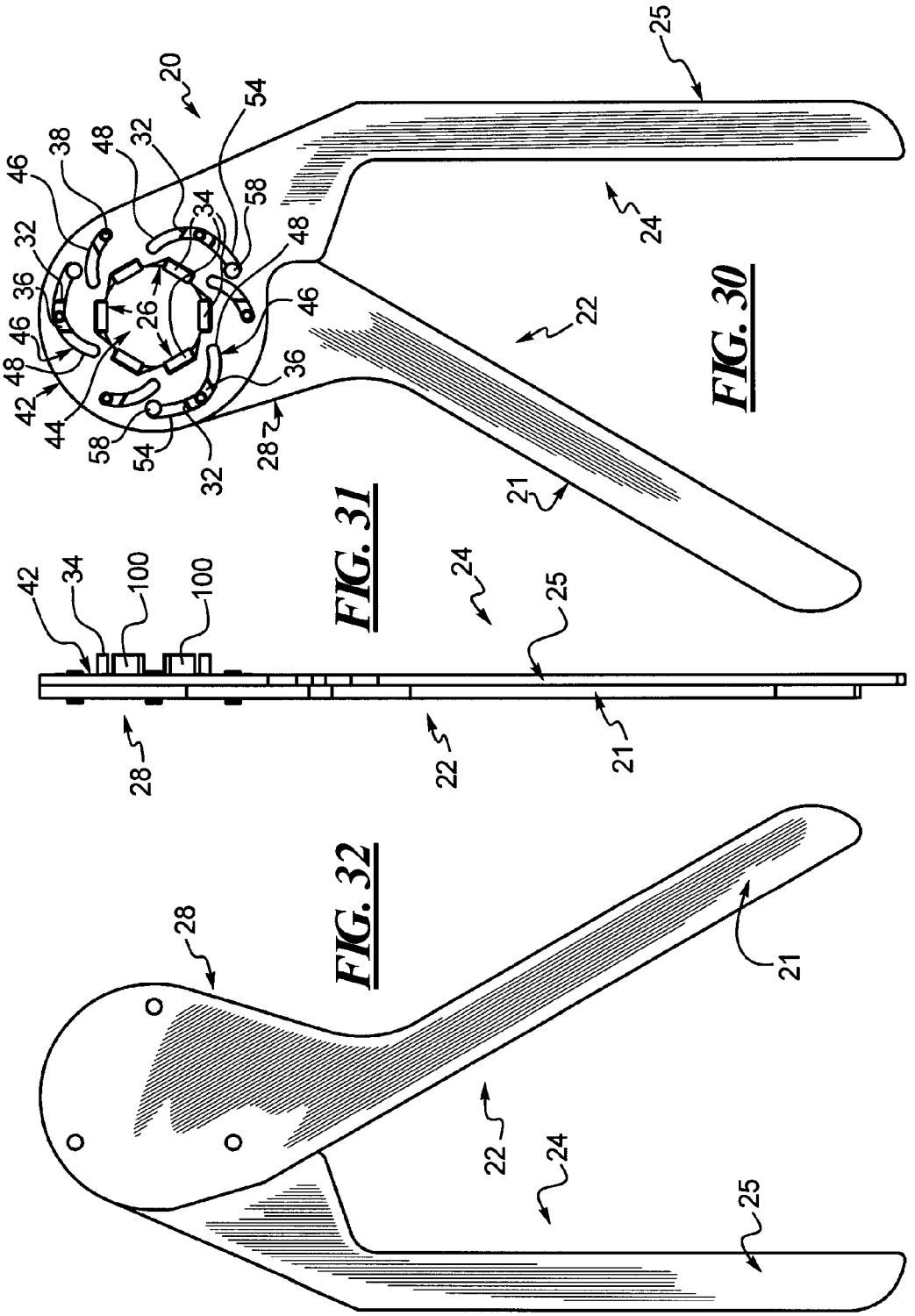

FIG. 30

FIG. 31

FIG. 32

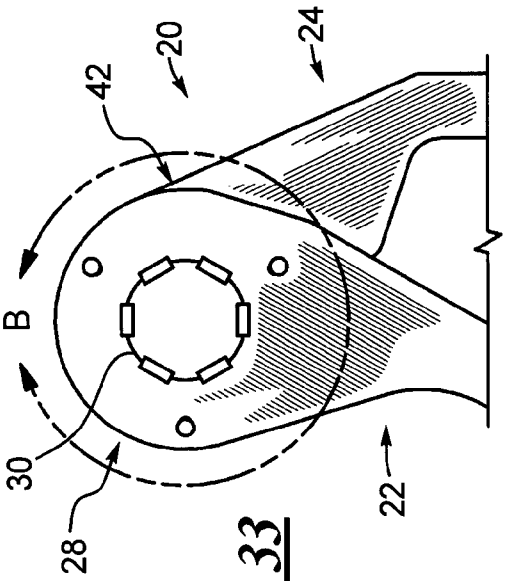

FIG. 33

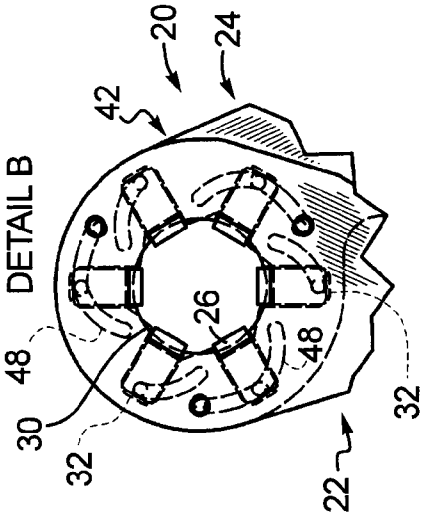

FIG. 34

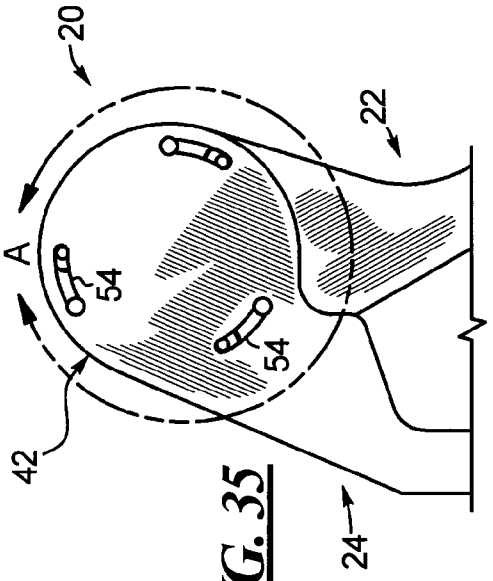

FIG. 35

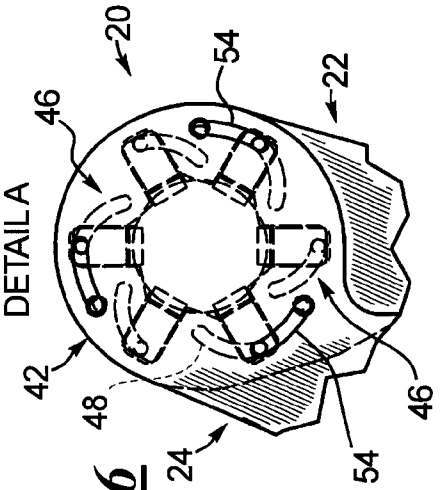

FIG. 36

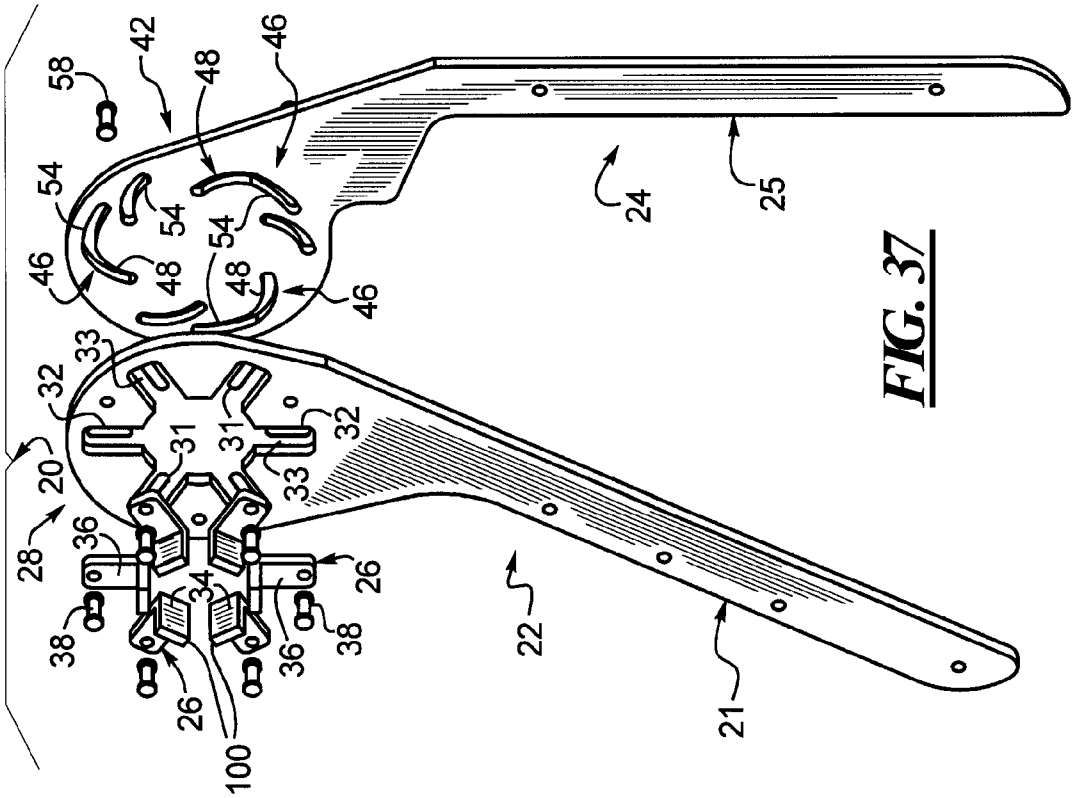
58
42
48
46
54
54
54
46
48
48
46
33
32
31
31
32
33
20
28
36
34
26
38
38
36
26
100
22
21
24
25

FIG. 37

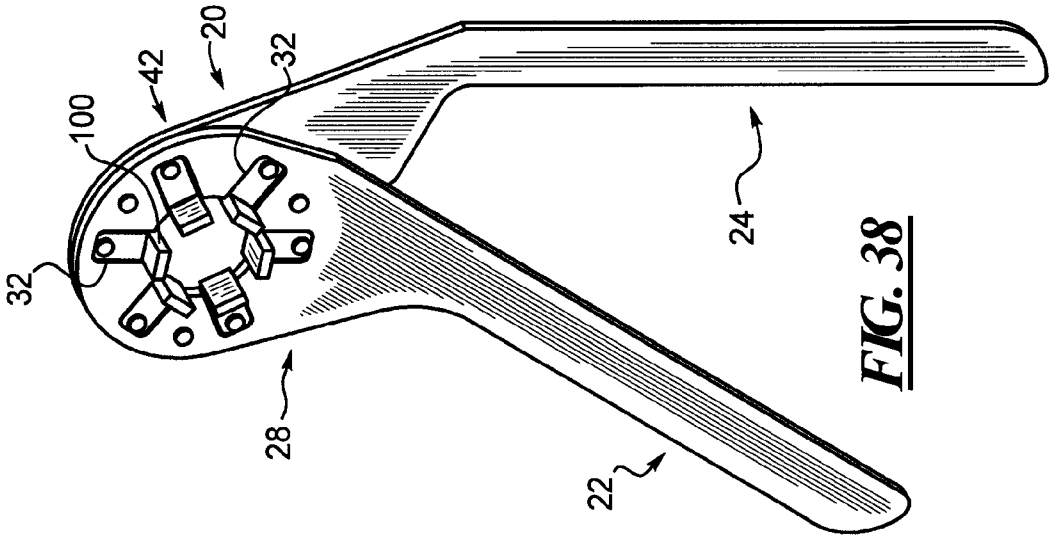
20
42
32
100
32
28
22
24

FIG. 38

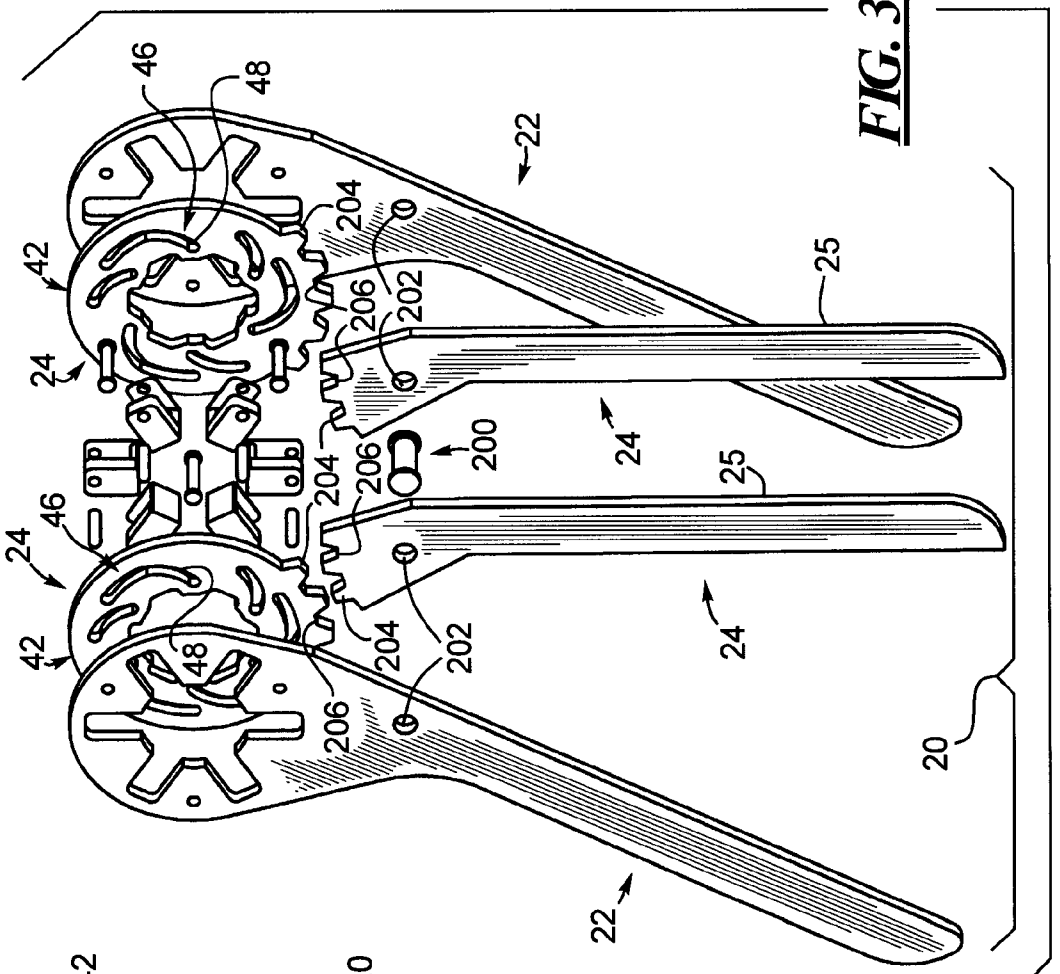
46
48
42
24
46
24
42
48
22
204
206
202
204
206
200
204
206
202
204
206
25
24
25
24
20
22

FIG. 39

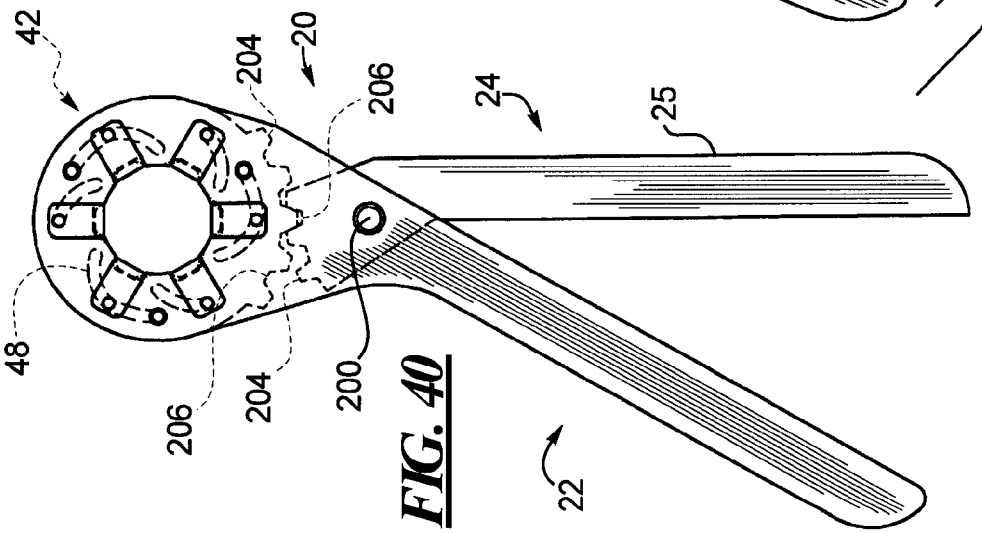
42
20
204
206
24
25
48
206
204
200
22

FIG. 40

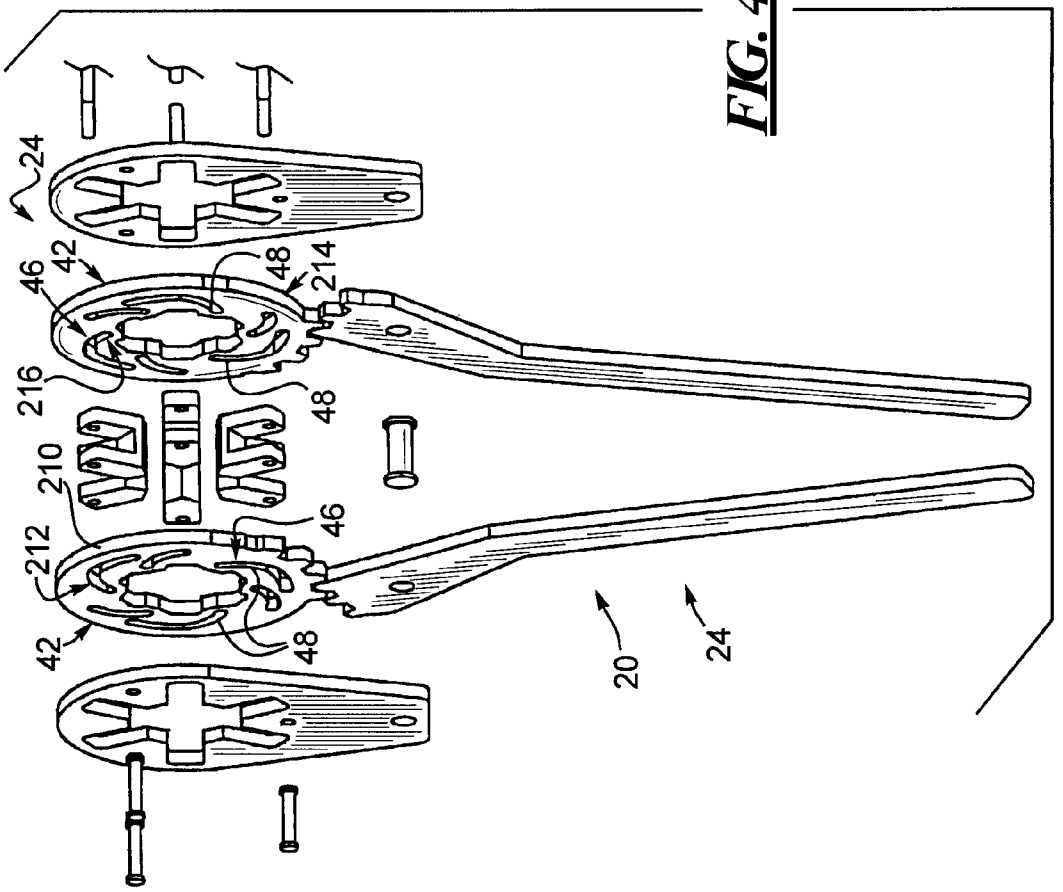

FIG. 43

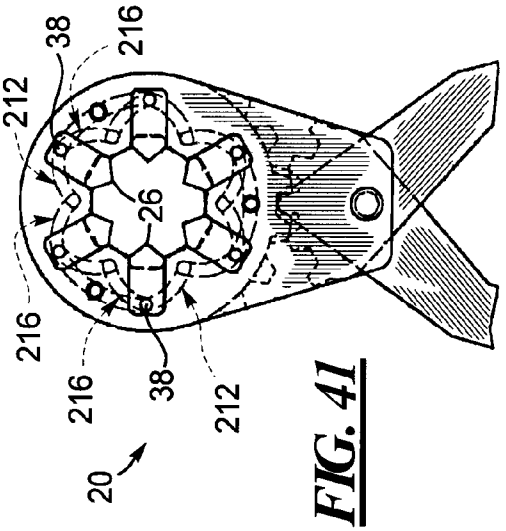

FIG. 41

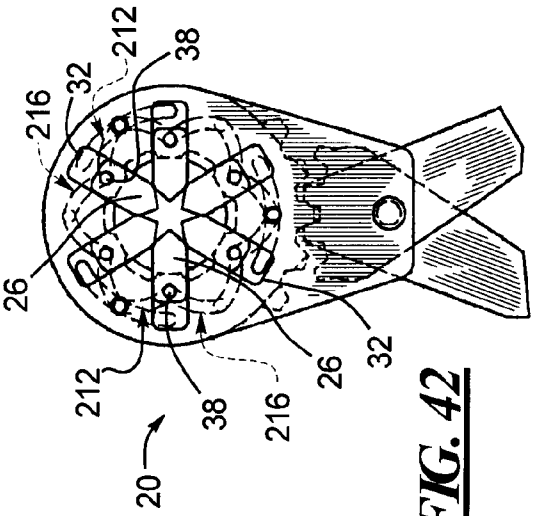

FIG. 42

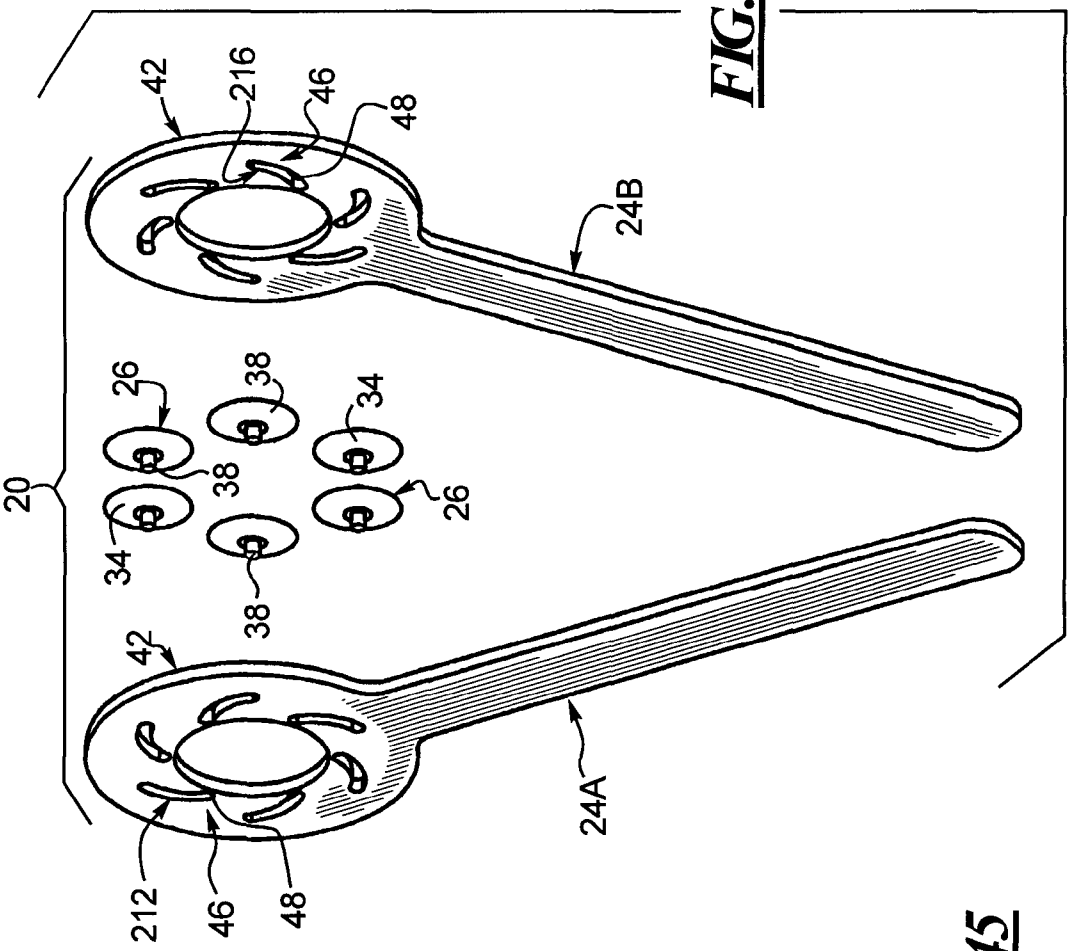

FIG. 46

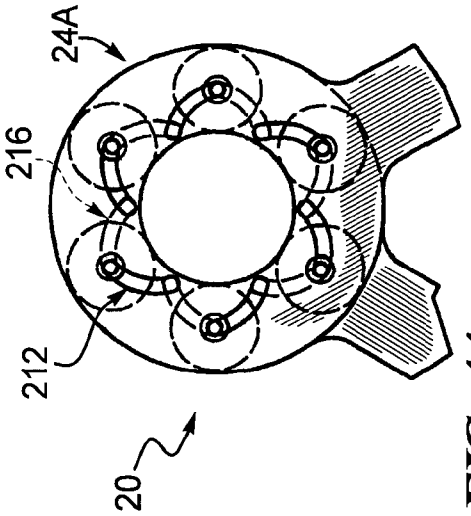

FIG. 44

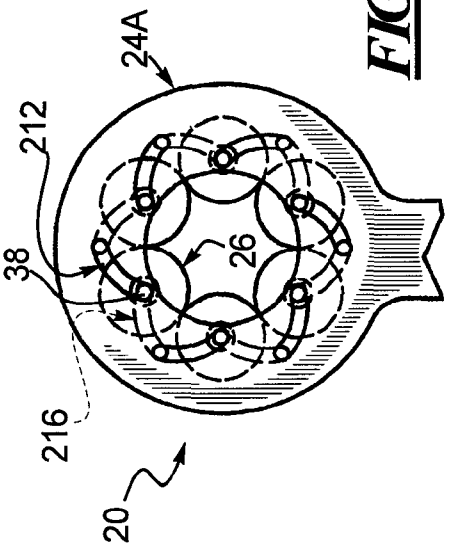

FIG. 45

ADJUSTABLE GRIPPING TOOL

RELATED APPLICATIONS

This application is a continuation-in-part of and claims the benefit of and priority from U.S. application Ser. No. 10/763,489, filed Jan. 23, 2004, now issued as U.S. Pat. No. 6,889,579.

BACKGROUND

This disclosure pertains to a hand tool and more particularly, to an adjustable gripping tool which, as a result of manual operation, self-energizes, automatically configures to engage differently dimensioned and shaped work pieces and de-energizes upon release of actuating force.

Various types of adjustable gripping tools are known in the art. Specifically, several known adjustable gripping tools are embodied in the form of a "crescent" wrench, an adjustable socket wrench, pipe wrench, vice grips, crimpers, bolt and nut cutters, pipe and tube cutters, and various other "plier-type" gripping tools. A crescent wrench is an adjustable open end wrench that has stationary rotatable screw which engages a toothed rack formed on a first jaw element movable with respect to the second jaw element extending from the first element. The adjustable socket wrench includes a shell housing movable elements, such that movement of the first element with respect to the shell causes the elements to move with respect to the shell in order to engage the work piece. One cutting tool version has adjustable cutting jaws that when tightened and rotated around a tube score and cut the tube. Another version of the cutting tool uses a blade cutting mechanism. The plier-type devices include a pair of first elements connected in such a manner so as to move at least two jaws toward one another in order to engage the work piece. The crimping tools provide various functions, such as specialty segmented dies that expand or contract via interaction of a tapered boy with a fixed diameter or a plier-type device crimper with jaws that have been modified as a special head to crimp the work piece.

Each of the prior art devices has disadvantages. The crescent wrench is not automatically resizable during use. The socket device is limited in its effective range of dimensional capability. In other words, a large number of sockets is needed to service a relatively standard range of work pieces, the work pieces must have a standard configuration and the work pieces must be engaged axially.

The plier-type devices fail to engage the work piece evenly around or within the circumference with proper offsetting forces and stability which aides in operation of the tool. The plier-type devices also concentrate the applied mechanical forces in a point-loading configuration creating pressure points and stress risers on the work piece surface.

The tube cutting devices cannot be used with one hand. Another disadvantage of tube cutting devices, in particular, knife blade cutters, is that the tubing is often distorted as a result of the asymmetrical cutting forces applied by the blade against the tube. Other tube cutting devices, such as screw-and-wheel-type tube cutters require continuous rotation of the cutting wheel around the circumference of the tube while simultaneously increasing the force applied by the cutting wheel to the tube in order to increase the cutting depth.

Prior art crimping devices cannot create symmetrically balanced crimps with a simple hand tool. For example, crimping a metal sleeve on a hydraulic hose requires a press and a proper die for proper application. Also all of the previously available gripping tools either loosely hold the work piece or

hold the work piece in a manner that concentrates and focuses the gripping forces in a point pressure-loading configuration. This concentration of gripping forces on certain points oftentimes deforms the work piece. Also the previously available tools for wrench applications could not be easily sized to the work piece.

Therefore, there exists a need in the art for an adjustable gripping tool which, as a result of manual operation, self-energizes the tool action, may be automatically sized and resized to engage a work piece, de-energizes upon release of actuation force, that has a broad range of dimensional capability, engages work pieces axially and radially and provides offsetting forces for stability in operation. Beyond the ability to resize the gripping range, the gripping tool of the present disclosure symmetrically translates the force applied to the gripping tool onto the work piece in a symmetrically balanced and mechanically advantaged and efficient way. Thus, an even distribution of gripping and rotational force about the work piece is achieved; whereby allowing for the most efficient distribution of mechanical stress about the work piece. For any given force required to manipulate the work piece the present disclosure will accomplish the work with the minimal distortion of the work piece by distributing the work force over the largest area of the work piece. Other advantages of the adjustable gripping tool of the present disclosure include decreased costs, increased productivity and multi-access engagement of the work piece resulting in a mechanically advantaged, efficient, even and balanced distribution of working forces.

BRIEF DESCRIPTION OF THE DRAWINGS

Certain embodiments are shown in the drawings. However, it is understood that the present disclosure is not limited to the arrangements and instrumentality shown in the attached drawings, wherein:

FIG. **1** is an exploded perspective view of an adjustable gripping tool in accordance with the principles of the present disclosure.

FIG. **2** is a top plan view of the adjustable gripping tool of FIG. **1** disposed in an open or first operative position.

FIG. **3** is a sectioned view of the adjustable gripping tool of FIG. **2** wherein one component of a first element has been removed.

FIG. **4** is a top plan view of the adjustable gripping tool of FIG. **1** disposed in a closed or second operative position.

FIG. **5** is a sectional view of the adjustable gripping tool of FIG. **4** taken along a line passing through a second element of the adjustable gripping tool.

FIG. **6** is a detailed broken-away section view of the adjustable gripping tool of FIG. **6** wherein one component of the first element has been removed.

FIG. **7** is a detailed broken-away section view of the adjustable gripping tool of FIG. **6** wherein the lock mechanism is disposed in a locked or second operative position.

FIG. **8** is a top plan view of another embodiment of an adjustable gripping tool in accordance with the principles of the present disclosure.

FIG. **9** is a top plan view of yet another embodiment of an adjustable gripping tool in accordance with the principles of the present disclosure.

FIG. **10** is a perspective view of another embodiment of an adjustable gripping tool in accordance with the principles of the present disclosure.

FIG. **11** is a top plan view of the adjustable gripping tool of FIG. **10**, disposed in a closed or second operative position.

FIG. **12** is a sectional view of the adjustable gripping tool of FIG. **11** taken along a line passing through the second element of the adjustable gripping tool.

FIG. **13** is a perspective view of another embodiment of an adjustable gripping tool in accordance with the principal aspects of the present disclosure.

FIG. **14** is a top plan view of another embodiment of an adjustable gripping tool in accordance with the principal aspects of the present disclosure.

FIG. **15** is a sectional view of the adjustable gripping tool of FIG. **14** taken along a line passing between a first element and a second element.

FIG. **16** is a perspective view of another embodiment of an adjustable gripping tool in accordance with the principal aspects of the present disclosure.

FIG. **17** is a perspective view of the adjustable gripping tool of FIG. **16**.

FIG. **18** is an exploded view of another embodiment of an adjustable gripping tool in accordance with the principal aspects of the present disclosure.

FIG. **19** is a top plan view of the adjustable gripping tool of FIG. **18**.

FIG. **20** is a top plan view of another embodiment of an adjustable gripping tool in accordance with the principal aspects of the present disclosure.

FIG. **21** is an exploded view of another embodiment of an adjustable gripping tool in accordance with the principal aspects of the present disclosure.

FIG. **22** is an exploded view of another embodiment of an adjustable gripping tool in accordance with the principal aspects of the present disclosure.

FIG. **23** is a top plan view of another embodiment of an adjustable gripping tool in accordance with the principal aspects of the present disclosure.

FIG. **24** is a perspective view of another embodiment of an adjustable gripping tool in accordance with the principal aspects of the present disclosure.

FIG. **25** is a perspective view of another embodiment of an adjustable gripping tool in accordance with the principal aspects of the present disclosure.

FIG. **26** is a perspective view of another embodiment of an adjustable gripping tool in accordance with the principal aspects of the present disclosure.

FIG. **27** is a perspective view of another embodiment of an adjustable gripping tool in accordance with the principal aspects of the present disclosure.

FIG. **28** is a perspective view of another embodiment of an adjustable gripping tool in accordance with the principal aspects of the present disclosure.

FIG. **29** is a perspective view of another embodiment of an adjustable gripping tool in accordance with the principal aspects of the present disclosure.

FIG. **30** is a top plan view of another embodiment of an adjustable gripping tool in accordance with the principal aspects of the present disclosure.

FIG. **31** is side elevation view of the adjustable gripping tool of FIG. **30**.

FIG. **32** is a bottom plan view of the adjustable gripping tool of FIG. **30**.

FIG. **33** is a partial top plan view of another embodiment of an adjustable gripping tool in accordance with the principal aspects of the present disclosure.

FIG. **34** is a detailed view of a portion of the adjustable gripping tool of FIG. **33** as defined by line B.

FIG. **35** is a partial bottom plan view of the adjustable gripping tool of FIG. **33**.

FIG. **36** is a detailed view of a portion of the adjustable gripping tool of FIG. **35** as defined by line A.

FIG. **37** is an exploded view of another embodiment of an adjustable gripping too in accordance with the principal aspects of the present invention.

FIG. **38** is a perspective view of the adjustable gripping tool of FIG. **37**.

FIG. **39** is an exploded view of another embodiment of an adjustable gripping tool in accordance with the principal aspects of the present disclosure.

FIG. **40** is a top plan view of the adjustable gripping tool of FIG. **39**.

FIG. **41** is a top plan view of another embodiment of an adjustable gripping tool in accordance with the principal aspects of the present disclosure.

FIG. **42** is another top plan view of the adjustable gripping tool of FIG. **41**.

FIG. **43** is an exploded view of the adjustable gripping tool of FIGS. **41** and **42**.

FIG. **44** is a top plan view of another embodiment of an adjustable gripping tool in accordance with the principal aspects of the present disclosure.

FIG. **45** is another top plan view of the adjustable gripping tool of FIG. **44**.

FIG. **46** is an exploded view of the adjustable gripping tool of FIGS. **44** and **45**.

DETAILED DESCRIPTION OF A PREFERRED EMBODIMENT OF THE DISCLOSURE

For the purposes of promoting and understanding the principles disclosed herein, reference will now be made to the preferred embodiments illustrated in the drawings and specific language will be used to describe the same. It will nevertheless be understood that no limitation of the scope is thereby intended. Such alterations and further modifications in the illustrated device and such further applications are the principles disclosed as illustrated therein as being contemplated as would normally occur to one skilled in the art to which this disclosure relates.

One principal aspect of the present disclosure is directed to an adjustable gripping tool for engaging a work piece to impart work thereto. The gripping tool includes a first element and a second element connected for a relative movement to generate movement of at least one gripping element. The first element includes a gripping portion configured to engage the work piece including at least one guide and at least one gripping element. Each at least one gripping element may include a body portion adapted for engaging a work piece, an arm portion configured to engage one of the guides and/or a force transfer element contiguous with the arm portion. The second element includes an actuation portion generally aligned with the first element and having at least one slot. Each at least one slot has a section configured to engage one of the force transfer elements such that movement of the second element with respect to the first element actuates each at least one section to contact and move each respective force transfer element thereby actuating each said at least one gripping element along respective at least one guide.

FIG. **1** illustrates in an exploded perspective view of the adjustable gripping tool **20** in accordance with principles of the present disclosure. The adjustable gripping tool **20** primarily includes a first element **22** and a second element **24** connected for relative movement. In one embodiment of the present disclosure, the first element **22** includes a pair of elements **23**A, **23**B disposed on opposing sides of the second element **24**. It is within the teachings of the present disclosure

that the first element **22** may be configured with a single element **23**A or **23**B, or as a pair of elements **23**A, **23**B as may be desired with respect to other design factors of importance to one of skill in the art. The first element **22** includes a first grasping portion **21** and the second element **24** includes a second grasping portion **25**. The first and second grasping portions **21**, **25** are formed substantially as and commonly referred to as a handle of a tool. The relative movement between the first element **22** and the second element **24** generates, in one embodiment, generally linear movement of the gripping elements **26**.

The first element **22** further includes a gripping portion **28**, formed substantially as and commonly referred to a head of a tool, disposed at one end of the first grasping portion **21** and configured to engage the work piece (not shown, see for example only and not by way of limitation FIGS. **10**, **14**, **15** and **20**) including a first opening **30**, a plurality of guides **32** extending radially from the first opening **30** and the gripping elements **26**. It is within the teachings of the present disclosure that the guides **32** may be formed in any suitable configuration. For example, the guides may be formed as groves, channels or any other suitable configuration. Not by way of limitation, but such structural configuration is often guided by manufacturing methods or capabilities. Additionally, the guides **32** may be curvilinear or linear. The gripping elements each include a body portion **34** adapted for engaging the work piece, an arm portion **36** configured to engage one of the guides **32** and a force transfer element **38** contiguous with or preferably connected to the arm portion **36**. It is within the teachings of the present disclosure that the gripping elements may be integrally formed in any suitable manner. It will also be recognized that the gripping elements may be formed in any other suitable manner as desired to achieve any intended purpose or function. Examples of such other configurations or formations will be disclosed below, but shall not be considered limiting in any sense.

In one embodiment of the present disclosure, the arm portion **36** of the gripping elements **26** further includes a pair of arms **37**A, **37**B disposed at opposite ends of the body portion **34** such that the gripping elements **36** are substantially U-shaped. It will be recognized by those of skill in the art that the pair of arms **37**A, **37**B, when so provided engaged the respective guides **32** formed in the first element elements **23**A, **23**B, respectively. The pair of arms **37**A, **37**B each include an aperture **40** aligned such that one of the force transfer elements **38** is contiguous therewith for positioning and actuation of the gripping elements **26** as detailed below.

It is within the teachings of the present disclosure that the gripping elements may have a smooth or rough face with which to engage the work piece, as desired. For example, the rough face may have a grooved, serrated, checked or any other suitable finish. Furthermore, the force transfer elements **38** may be configured as pins or other suitable structure to provide the functions as described herein. Moreover, the first element and/or each of the elements thereof may often be referred to as a handle and the second element may often be referred to as a lever. It will be recognized by those of skill in the art that the terms used herein are not of a limiting sense. Rather, these terms are used to broadly describe the structure and function herein.

The second element **24** further includes an actuation portion **42**, formed substantially as and commonly referred to as a head of a tool, disposed at one end of the second grasping portion **25** and having a second opening **44** preferably concentric with the first opening **30** and a plurality of slots **46** disposed adjacent the second opening **44**. It will be recognized by those of skill in the art that the first and second openings need not be precisely concentric in order to operate as disclosed and provided the intended function. Rather, references to concentric alignment shall include any alignment of the first and second elements which permits operation as disclosed. In one embodiment, each of the slots **46** has a first section **48** configured to engage one of the force transfer elements or pins **38** such that movement of the second element **24** with respect to the first element **22** simultaneously actuates the first sections **48** to contact and move the force transfer elements **38** along a path defined by the first section thereby actuating the gripping elements **26** along the guides **32**. It will be recognized by those of skill in the art that in this embodiment the first sections **48** define a path which generally decreases in terms of radial measurement from a center of the second opening **44** from a first outer end **50** to an inner end **52**. In another embodiment, the paths may generally increase in terms of radial measurement from the center of the second opening **44** such that relative movement between first and second elements generates an outward motion of the gripping elements. Alternatively, the guides, slots and force transfer element may be configured to interact in a number of different ways to move the actuation elements into movement with the gripping or work piece engaging elements. For example, a pair of slots may be formed in a pair of cooperative first and/or second elements where each slot defines an arcuate path that simultaneously act on the force transfer element to effect movement of the gripping element, as described in further detail herein.

In one embodiment, each of the slots **46** further includes a second section **54** extending from the first section **48**. It will be recognized by those of skill in the art that the second section **54** defines a path which is generally consistent in terms of radial measurement from the center of the second opening **44** from the inner end **52** to a second outer end **56**.

In one embodiment of the present disclosure, the first element **22** further includes a plurality of aligning elements **58** for engaging the second sections **54** and where the two elements **23**A, **23**B are used for positioning and interconnecting the elements **23**A, **23**B of the first element **22**. Each aligning element **58** is disposed between an adjacent pair of guides **32** and extends parallel to the force transfer element **38**. Apertures **60** are formed in the first elements **23**A, **23**B to receive and engage the aligning elements **58**. In operation, each one of the aligning elements **58** engages one of the second sections **54** so that during relative movement between the first element **22** and the second element **24**, or first and second elements, respectively, the first and second openings **30**, **44** remain generally aligned. It will be recognized by those of skill in the art that the second sections **54** engage the aligning elements **58** in response to the forces induced by the divergent path of the first sections **48** on the force transfer elements **38**. As a result, not only do the first and second openings **30**, **44** remain generally concentrically aligned, but the gripping elements **26** are actuated along the guides **32** with equal, likewise displacement. It is within the teachings of the present disclosure that the slots **46** may include a third section defined within the first section. The third section facilitates actuating a respective gripping element at a different rate. It will be recognized by those of ordinary skill in that art that such configuration will be advantageous when timing of engagement between the gripping elements and the work piece is desired. For example, a third section may be used in a crimping operation wherein at least one of the slots includes a first section and a third section and at least one of the slots includes a first section. All the gripping elements are initially actuated by the first section of each slot. However, those gripping elements associated with the third section will be moved at a

different rate as dictated by the third section. Such different rate may increase, decrease or maintain the timing of engagement with the work piece. Those gripping elements not associated with the third section continue to move as per the first section. Accordingly, the third section gripping elements hold the work piece while the first section gripping elements further act on the work piece by piercing or any other desired action.

A spacer **62** may be used to interconnect the elements **23**A, **23**B to define a pocket **64** such that a spring **66** disposed within the pocket contacts the second element **24** in order to dispose the second element in a normally open position (see FIGS. **2** and **3**). The spacer may be connected to each of the elements **23**A, **23**B by press fit pins **66** engaging aligned apertures **68** or any other suitable device or in any other suitable manner.

A lock mechanism **70** is connected to the first element **22** such that operative movement of the lock mechanism **70** from a first operative position (see FIGS. **4** and **5**) to a second operative position (see FIGS. **2** and **3**) secures the first element **22** and second element **24** in any desired orientation. The lock mechanism **70** may be connected between the elements **23**A, **23**B by a press fit pin **72** engaging aligned apertures **74** or by any other suitable device or in any other suitable manner. The inner or operative end **76** of the lock mechanism **70** is configured as a cammed or eccentric surface. In one embodiment, this may be achieved by disposing aperture **74** offset from the longitudinal axis of the lock mechanism **70**. Alternatively, an eccentric shaped surface may be defined on the inner or operative end **76** or by any other suitable manner.

When oriented in the first operative position (See FIGS. **4** and **5**), the inner end **76** of the lock mechanism **70** defines a clearance (**82**, see FIG. **6**) with respect to the second element **24**. Movement of the actuating end **78** of the lock mechanism **70** from the first operative position to the second operative position (See FIGS. **2** and **3**) moves the inner end **76** about the aperture **74** such that the operative end **76** binds against the second element **24** thereby securing the first element and second element in a desired orientation. It is within the teachings of the present disclosure that the lock mechanism may be formed with any suitable structure for the desired functionality. For example, in one embodiment, the lock mechanism may include cooperative, complimentary saw-tooth, grooved or geared surfaces that facilitate an interference fit so that the tool may be used to impart work to the work piece with either a clockwise or a counter-clockwise orientation. Any other suitable structure which would facilitate an interference fit would be useful and/or desireable.

In one embodiment of the present disclosure, the gripping portion **28** includes six gripping elements **26**. However, it would be recognized by those of skill in the art, that the gripping portion **28** need include only at least one gripping or engaging element **26** and that any other suitable number of gripping or work piece engaging elements may be provided. In the embodiment with six gripping elements, the adjustable gripping tool may be advantageously used in connection with hex-shaped work pieces where the gripping elements face-load each of the flats of the work piece. Such a configuration is advantageous compared to conventional inventors that point-load a hex-shaped fastener at its corners.

FIG. **2** illustrates the adjustable gripping tool of FIG. **1** disposed in an open position. The second element **24** is biased from the first element **22** as described above to maintain such open position. The lock mechanism **70** is disposed in the second operative position securing the first element **22** and second element **24** a desired orientation. The adjustable gripping tool **20** of this embodiment is configured such that the gripping portion **28** and the actuation portion **42** are adapted to circumferentially engage the work piece. However, in FIG. **2**, the gripping elements **26** are disposed such that the arms **36** engage the guides **32** in a manner which is characteristic of the open position of the adjustable gripping tool **20**. The force transfer elements **38** and aligning elements **58** are shown as force transfer elements press fit to the gripping elements **26** and first element **22** respectively. Alternatively, the force transfer elements can be manufactured as a protrusion of the gripping or work piece engaging element.

FIG. **3** illustrates a section view of the adjustable gripping tool **20** of FIG. **2** wherein one element of the first element **22** has been removed. Element **23**B is shown having spacer **62** connected thereto to define a pocket **64** such that the spring **66** disposed within the pocket **64** contacts the second element **24** to bias the second element **24** in the open position. As described above, the lock mechanism **70** is engaged in the second operative position securing the first element **23**B and second element **24** in the desired open position. Aligning elements **58** are disposed at the inner end **52** of the slot **46** which defines a point of separation between the first section **48** and the second section **54**. The force transfer elements **38** are disposed at the outer end **50** of the first section **48** of the slot **46** as will be shown and described in more detail below.

FIG. **4** illustrates an adjustable gripping tool **20** disposed in a closed position wherein the first element **22** and second element **24** are disposed immediately adjacent. The lock mechanism **70** is disposed in the first operative position, unlocked. The gripping elements **26** have been moved from an open position, as shown in FIGS. **2** and **3**, to a closed position such that the gripping elements are adapted for engaging the work piece.

FIG. **5** illustrates a section view of the adjustable gripping tool **20** of FIG. **4** taken through the second element where the adjustable gripping tool is disposed in the second operative or closed position. The first element is represented by element **23**B which is disposed immediately adjacent the second element **24**. The force transfer elements **38** have been moved as a result of contact with the first section **48** of the slots **46** from an outer end **50** to an inner end **52**. The aligning elements **58** have been moved from an inner end from the second section **54** of the slot **56** to an outer end **56**. It will be recognized by those of skill in art that the paths defined by the first and second sections **48**, **54** of the slot **46** are divergent. The aligning elements **58** engage the second portion **54** of the slot **46** in order to maintain proper orientation between the first element **22** and the second element **24**. The force transfer elements **38** engage the first portion **48** of the slot **46** such that the generally decreasing diameter dimension of the path defined by the first portion **48** causes the force transfer elements to move closer to the center of the first and second openings **30**, **44**. Accordingly, the gripping elements **26** are likewise actuated along the guides **32** to engage the work piece. The lock mechanism **70** is disposed in a first operative position. It should also be noted that the slots can be reversed and the action reversed such that the actuation elements are radiating from the center during activation.

FIG. **6** illustrates a detailed broken away view of the adjustable gripping tool **20** of FIGS. **4** and **5**. The lock mechanism **70** is disposed in a first operative or open position. The lock mechanism **70** is connected to the first element **22** by a pin **74** which is disposed offset from a longitudinal axis of the lock mechanism **70**, such that in this first operative position, a clearance **82** is defined between the lock mechanism operative or inner end **76** and the second element **24**.

FIG. **7** illustrates the adjustable gripping tool **20** of FIG. **6** wherein the lock mechanism **70** has been moved from the first

operative position (shown in FIG. **6**) to a second operative position. As a result of movement of the lock mechanism **70** the clearance is eliminated between the operative or inner end **76** and the second element **24**. Accordingly, the lock mechanism **70** binds against the second element **24** such that the first element and second element **24** cannot be moved relative to one another without first releasing the lock mechanism **70**. It will be recognized by those of skill in the art that the pin **74** used to mount the lock mechanism **70** to the first element **22** is most often offset from the longitudinal axis of the lock mechanism **70**. However, an eccentric surface at the inner or operative end **76** may also be formed to enable the same function.

FIG. **8** illustrates another embodiment of the present disclosure of the adjustable gripping tool **20** wherein only three gripping elements **26** are shown. It is within the teaching of the present disclosure that the gripping portion **28** only include at least one gripping element **26**. Grips **84**A, **84**B may also be provided for the first element **22** and second element **24** to further facilitate effective ergonomic actuation of the adjustable gripping tool **20**. The remaining structural and functional elements and aspects of this embodiment of the present disclosure may be configured as any of the like structure and functional aspects of the other embodiments disclosed herein.

FIG. **9** illustrates yet another embodiment of the present disclosure directed to an adjustable gripping tool **20**. In this embodiment of the present disclosure, the gripping portion **28** and the actuation portion **42** are configured penannular. Such configuration enables the wrench **20** to engage the work piece laterally or in a radial direction. Further, four gripping elements **26** are illustrated in this embodiment. The remaining structural and functional elements and aspects of this embodiment of the present disclosure may be configured as any of the like structure and functional aspects of the other embodiments disclosed herein.

FIG. **10** illustrates another embodiment of the present disclosure wherein the adjustable gripping tool **20** is configured as a cutting or scoring device for engaging, for example, a tubular element. In this embodiment, the second element **24** is configured substantially U-shaped. Such configuration may be achieved by binding, folding or otherwise forming a unitary element as shown in FIG. **10**. The remaining structural and functional elements and aspects of this embodiment of the present disclosure may be configured as any of the like structure and functional aspects of the other embodiments disclosed herein.

The first and second elements **22**, **24** are connected for relative movement in order to generate linear movement of the gripping elements. It is within the teachings of the present disclosure that the gripping elements may also be configured to score or cut a work piece. For example, in one embodiment, the gripping elements described above which are configured to engage the work piece as described above may be replaced with gripping elements configured to perform the scoring or cutting functions.

FIG. **11** illustrates a top plan view of the embodiment of the present disclosure in FIG. **10** disposed in a closed position. The first and second elements **22**, **24** have been moved toward one another such that the gripping elements **26** extend into the first opening **30** to engage a work piece (not shown). As shown in FIG. **10**, this embodiment is configured to engage a tubular element, such as a pipe or other suitable work piece. For example, a polyvinyl chloride ("PVC") pipe may be cut or scored with the sharp-edged gripping elements of this embodiment and not distort the PVC pipe. As a result, in addition to a clean perpendicular cut-off, the PVC pipe is not deformed so that further coupling is problematic. The remaining structural and functional elements and aspects of this embodiment of the present disclosure may be configured as any of the like structure and functional aspects of the other embodiments disclosed herein.

FIG. **12** illustrates a sectional view of the adjustable gripping tool **20** of FIG. **10** taken through the first element **22**, where the tool **20** is disposed in an open position. The gripping element **26** disposed within the guides **32** include all the structural elements as described above. However, rather than a U-shaped body, a force transfer element extends from each side of the body portion to engage the slots of the pair of elements **25***a*, **25***b* (**25***b* in FIG. **11**) which comprise the second element **24**.

FIG. **13** illustrates a perspective view of another embodiment of an adjustable gripping tool in accordance with the principal aspects of the present disclosure. In this embodiment of the present disclosure, the adjustable gripping tool **20** includes gripping elements **26** which have extensions **100** that extend beyond the first element **22**. The extensions **100** facilitate engaging work pieces disposed in a space-limited location, where access for the entire tool **20** may be difficult or problematic. The remaining structural and functional elements and aspects of this embodiment of the present disclosure remain the same as detailed above. Alternatively, other structural elements may be formed on the extensions **100** to enable additional functions for the tool **20**, such as crimping, cutting, or any other suitable function. Additionally, the extensions **100** may extend to either side or both and incorporate any of the embodiments set for the below or herein to facilitate any intended function. The remaining structural and functional elements and aspects of this embodiment of the present disclosure may be configured as any of the like structure and functional aspects of the other embodiments disclosed herein.

FIG. **14** illustrates a top plan view of another embodiment of an adjustable gripping tool **20** in accordance with the principal aspects of the present disclosure. In this embodiment, the adjustable gripping tool **20** includes gripping elements **26** which are each configured as a cutting wheel that movably engages the work piece **102** to facilitate severing of the work piece **102** by movement of the tool **20** about the work piece **102** after movement of the second element **24** with respect to the first element **22**, as shown in FIG. **15**. As with the other gripping elements described herein, the cutting wheels **26** include a body portion **34** adapted for engaging work piece **102**, an arm portion **36** configured to engage one of the guides **32** and a force transfer element **38** contiguous with or preferably connected to the arm portion **36**. As shown in FIG. **15**, relative movement of the second element **24** with respect to the first element **22** actuates each gripping element or cutting wheel **26** along a respective guide **32** in order to facilitate engagement with the work piece **102**. It is within the teachings of the present disclosure that the gripping elements or cutting wheels **26**, in this embodiment or any other herein, may be configured in any suitable manner or structure in order to achieve any identified or desired purpose and that only at least one gripping element or cutting wheel **26** is necessary and the number of gripping elements or cutting wheels **26** is not limited. Furthermore, the adjustable gripping tool **20** may be configured such that the cutting wheels **26** may be replaceable in the event they dull or break. The remaining structural and functional elements and aspects of this embodiment of the present disclosure may be configured as any of the like structure and functional aspects of the other embodiments disclosed herein.

FIGS. **16** and **17** are perspective views of another embodiment of an adjustable gripping tool **20** in accordance with the principal aspects of the present disclosure. In this embodiment, the adjustable gripping tool **20** includes extensions **100** that project from the gripping elements **26** to engage an interior of a work piece (not shown for clarity). The extensions **100** shown in this embodiment are substantially L-shaped and define a pocket **106** between the extension **100** and the gripping element **26** to receive the work piece. When configured as such, the extension **100** of this embodiment, is facilitates a crimping operation. Another feature of this embodiment, is a reverse or divergent operation of the gripping elements **26** upon relative movement of the first element **22** with respect to the second element **24**. Such a configuration enables the gripping elements **26** to engage a first dimension work piece with the first and second elements **22**, **24** disposed in a first operative position (as shown in FIG. **16**) and a second dimension work piece with the first and second elements **22**, **24** disposed in the second operative position (as shown in FIG. **17**), such that the first dimension work piece is smaller than the second dimension work piece (both of which are not shown for clarity). It is within the teachings of the present invention that the adjustable gripping tool **20** as shown in FIG. **16** may be used to engage a single work piece and upon relative movement of the first and second elements **22**, **24** impart a crimping operation upon such work piece and complete such operation upon attaining the configuration as shown in FIG. **17**. It is within the teachings of this disclosure that the extensions **100** may take any other suitable configuration or structure, one such example may be the tap shown in FIG. **25** or a structure wherein the extensions project to both sides of the adjustable gripping tool. and function in the same manner to achieve any desired purpose. The remaining structural and functional elements and aspects of this embodiment of the present disclosure may be configured as any of the like structure and functional aspects of the other embodiments disclosed herein.

FIG. **18** is an exploded view and FIG. **19** is a top plan view, both of another embodiment of an adjustable gripping tool **20** in accordance with the principal aspects of the present disclosure. In this embodiment, the adjustable gripping tool **20** includes gripping elements **26** which have a planar configuration. The gripping elements **26** have a thickness **108** that is generally equivalent to a thickness **110** of the respective first element **22** with which such gripping element **26** is associated. Such a configuration of the gripping elements **26** in this embodiment facilitates flexibility of such gripping elements in operation of the gripping tool **20** to engage the work piece. Moreover, gripping elements **26** having a planer configuration are more simple to manufacture various shapes and lengths and to assemble within the adjustable gripping tool **20**.

Another aspect of this embodiment of the present disclosure is that the gripping elements **26** are configured to have a V-shape **112** in the body portion of the gripping element such that the vertex **114** of the V-shape **112** is directed towards the force transfer element **38**. Such configuration facilitates face-loading and corner loading for hex-shaped work pieces or those work pieces with defined corners, as described in more detail above and point loading for those work pieces that are generally cylindrical, tubular or have corners with angles between adjacent sides thereof that are larger than the angle of the sides of the V-shape. The remaining structural and functional elements and aspects of this embodiment of the present disclosure may be configured as any of the like structure and functional aspects of the other embodiments disclosed herein.

FIG. **20** is a top plan view and FIGS. **21** and **22** are exploded views, all of other embodiments of an adjustable gripping tool **20** in accordance with principal aspects of the present disclosure. Each of the embodiments shown in these figures has a common element, a cover plate **116**, connected in any conventional manner to the first element **22** to reinforce and protect the adjustable gripping tool **20**. As shown in FIG. **20**, the cover plate **116** has a penannular configuration and is attached to the gripping portion **28** of the first element **22**. It will be recognized by those skill in art that the cover plate **116** of such configuration facilitates reinforcement of the adjustable gripping tool **20** having a open head or penannular configuration that facilitates radial engagement of a work piece **102**. This embodiment also shows the V-shaped gripping elements of an above-described embodiment for face- or corner-loading the work piece **102**. The remaining structural and functional elements and aspects of this embodiment of the present disclosure may be configured as any of the like structure and functional aspects of the other embodiments disclosed herein.

As shown in FIG. **21**, this embodiment of the present disclosure includes a cover plate **116** that has an overall dimension and shape that is generally equivalent to an overall dimension and shape of the first element **22** and is attached over each first element **22**. It will be recognized by those of skill of the art that substantial reinforcement of the entire length of the tool **20**, i.e. gripping and grasping portions, is provided in this embodiment of the present disclosure and that such configuration also provides protection to the operating elements of the adjustable gripping tool. The remaining structural and functional elements and aspects of this embodiment of the present disclosure may be configured as any of the like structure and functional aspects of the other embodiments disclosed herein.

As shown in FIG. **22**, the cover plate **116** is configured as a receptacle **118** defined by a pair of cover portions **120** offset by a margin portion **122** to engage outer surfaces of a pair of aligned first elements **22**. In addition to the reinforcing and protection advantages discussed above, this embodiment of the present disclosure further provides an additional level of isolation and protection of the gripping and grasping portions and in particular, the gripping elements, from the effects of an operating environment that may be dusty, dirty or subject to harsh fluids. The remaining structural and functional elements and aspects of this embodiment of the present disclosure may be configured as any of the like structure and functional aspects of the other embodiments disclosed herein.

FIG. **23** is a top plan view of another embodiment of an adjustable gripping tool **20** is accordance with the principle aspects of the present disclosure. In this embodiment, the adjustable gripping tool **20** includes the gripping elements **26** configured to engage a non-standard work piece. As used in this disclosure, a non-standard work piece may be a security fastener, or any other type or kind of work piece that does not have a conventional cylindrical, tubular, hex, square or other standard dimension or shape. As discussed many times above, the adjustable gripping tool **20** may have the gripping elements **26** configured in any suitable manner to engage any desired work piece. The remaining structural and functional elements and aspects of this embodiment of the present disclosure may be configured as any of the like structure and functional aspects of the other embodiments disclosed herein.

FIGS. **24** and **25** are perspective views of other embodiments of an adjustable gripping tool **20** in accordance with the principle aspects of the present disclosure. In these embodiments, the gripping elements **26** include extensions **100** which are configured to cooperatively function to facilitate

chasing threads. It will be recognized by those of skill in the art that the gripping elements **26** and extensions **100** may be configured to engage any desired type of thread, for example, pipe threads, standard coarse or fine threads, metric coarse or fine threads or any other conventional or proprietary type of thread configuration. The embodiment shown in FIG. **24** is configured to engage exterior threads formed on a work piece, while the embodiment disclosed in FIG. **25** is configured to engage the interior threads formed on a work piece, both in a manner described above. These embodiments are particularly advantageous over prior art thread chasing devices in that the present embodiments may chase all the threads of the work piece rather than starting at one end of the work piece and proceeding axially which may be difficult or problematic in the event that the initial starting threads are so damaged that the thread chasing device cannot properly engage the work piece threads. The present embodiment overcomes such disadvantage by engaging a substantial portion of the threads of the work piece past an initial engagement point for the threads, as would a conventional thread chaser. The remaining structural and functional elements and aspects of this embodiment of the present disclosure may be configured as any of the like structure and functional aspects of the other embodiments disclosed herein.

FIG. **26** is a perspective view of another embodiment of an adjustable gripping tool **20** in accordance with the principle aspects of the present disclosure. In this embodiment, the first element **22** includes a pair of first elements **22** and a backbone **120** connecting a portion of common edges of the pair of first elements **22**. The pair of first elements **22** and the backbone **20** are integrally formed from a unitary blank of material. This embodiment is advantageous in that manufacture of the first element is efficient, economical and has increased strength. The remaining structural and functional elements and aspects of this embodiment of the present disclosure may be configured as any of the like structure and functional aspects of the other embodiments disclosed herein.

FIGS. **27** and **28** are perspective and top plan views other embodiments of an adjustable gripping tool **20** in accordance with the principle aspects of the present disclosure. In these embodiments, each gripping element **26** includes an extension **100** that projects from the gripping element **26** to define a second body portion **122** adapted for engaging the work piece such that the body portion **34** facilitates a first range of gripping ability and the second body portion **122** facilitates a second range of gripping ability. It will be recognized those of skill in the art that the adjustable gripping tool **20** of these embodiments facilitates a wide range of gripping ability such that a single adjustable gripping tool **20** may replace a considerable number of similar tools. The remaining structural and functional elements and aspects of this embodiment of the present disclosure may be configured as any of the like structure and functional aspects of the other embodiments disclosed herein.

FIG. **29** is a top plan view of another embodiment of an adjustable gripping tool **20** in accordance with the principle aspects of the present disclosure. In this embodiment, the adjustable gripping tool **20** includes gripping elements **26** that have been configured such that the body portion **34** of each gripping element **26** facilitates crimping a wire/terminal connection or a rather suitable or like connection. The remaining structural and functional elements and aspects of this embodiment of the present disclosure may be configured as any of the like structure and functional aspects of the other embodiments disclosed herein.

FIG. **30** is a top plan view, FIG. **31** is a side elevation view and FIG. **32** is a bottom plan view, all of another embodiment of an adjustable gripping tool **20** in accordance with the principle aspects of the present disclosure. In this embodiment, the adjustable gripping tool **20** primarily includes a first element **22** and a second element **24** connected for a relative movement. The first element includes a first grasping portion **21** and the second element includes a second grasping portion **25**. The first and second grasping portions **21**, **25** are formed substantially as and commonly referred to as a handle of a tool. The relative movement between the first element **22** and the second element **24** generates, in one embodiment, generally linear movement of the gripping elements **26**.

The first element **22** further includes a gripping portion **28**, formed substantially as and commonly referred to as a head of a tool, disposed at one end of the first grasping portion **21**, and configured to engage the work piece (not shown for clarity) including a plurality of guides **32** formed in the grasping portion **28** and the gripping elements **26**. The gripping elements **26** each include a body portion **34**, adapted for engaging the work piece, an arm portion **36**, configured to engage one of the guides **32** and a force transfer element **38** contiguous with or preferably connected to the arm portion **36**. In this embodiment, the guides **32** are formed as grooves in the gripping portion **28** that do not pass completely through the gripping portion, as best shown in FIG. **32**. It is within the teachings of the present disclosure that the guides **32** may be formed as slots, grooves, channels or any other suitable configuration. As discussed in the many embodiments above, it is within the teachings of the present disclosure that the gripping elements may be formed in any suitable manner or configuration.

The second element **24** further includes an actuation portion **42**, formed substantially as and commonly referred to as a head of a tool, disposed at one end of the second grasping portion **25** having an opening **44** and a plurality of slots **46** disposed adjacent the opening **44**. In one embodiment, each of the slots **46** has a first section **48** configured to engage one of the force transfer elements or pins **38** such that movement of the second element **24** with respect to the first element **22** simultaneously actuates the first sections **48** to contact the force transfer elements **38** along a path defined by the first section thereby actuating the gripping elements **26** along the guides **32**. It will be recognized by those of skill in the art that the first sections **48** define a path which generally decreases in terms of radial measurement from a center of the opening **44** from an outer end to an inner end. In another embodiment, the paths may generally increase in terms of radial measurement from the center of the opening **44**, such that relative movement between first and second elements generates an outward motion of the gripping elements originally disposed adjacent the center of the opening **44**. Alternatively, the guides, slots and force transfer elements may be configured to interact in a number of different ways to move the actuation elements into movement with a gripping or work piece engaging elements.

In this embodiment, the body portions **34** include an extension **100** to facilitate increased area of the body portion for gripping the work piece. In one embodiment, the first element **22** may further include a plurality of aligning elements **58** for engaging the second sections **54**. Each aligning element **58** is disposed between an adjacent pair of guides **32** and extends parallel to the force transfer element **38**. In operation, each one of the aligning elements **58** engages one of the second sections **54** during relative movement between the first element and the second element the first and second elements **22**, **24** remain generally aligned. The remaining structural and functional elements and aspects of this embodiment of the

present disclosure may be configured as any of the like structure and functional aspects of the other embodiments disclosed herein.

FIG. **33** is a partial top plan view of another embodiment of an adjustable gripping tool in accordance with the principle aspects of the present disclosure. FIG. **34** is a detailed view of a portion of the adjustable gripping tool **20** of FIG. **33** defined by line B. FIG. **35** is a partial bottom plan view of the adjustable gripping tool **20** of FIG. **33**. FIG. **36** is a detailed view of a portion of the adjustable gripping tool **20** of FIG. **35** as defined by line A. In this embodiment, the adjustable gripping tool **20** primarily includes a first element **22** and a second element **24** connected for relative movement. The first element **22** includes a gripping portion **28** including a plurality of guides **32** (as best shown in FIG. **34**) formed in the grasping portion **28** extending radially from a first opening **30** and the gripping elements **26**.

The second element **24** includes an actuation portion **42** having a plurality of slots **46** formed therein. It is within the teachings of the present invention that the slots **46** may be formed as slots, grooves, channels, any combination thereof or any other suitable configuration. In this embodiment, the slots **46** have a first section **48** that is configured as a groove or channel, while the second sections **54** of the slots **46** are formed completely through the actuation portion **42** as would a conventional slot. The remaining structural and functional elements and aspects of this embodiment of the present disclosure may be configured as any of the like structure and functional aspects of the other embodiments disclosed herein.

FIG. **37** is an exploded view and FIG. **38** is a top plan view, both of another embodiment of an adjustable gripping tool **20** in accordance with the principle aspects of the present disclosure. In this embodiment, the adjustable gripping tool **20** primarily includes a first element **22** and a second element **24** connected for relative movement. The first element **22** further includes a gripping portion **28** formed substantially as and often referred to as a head of a tool, disposed at one end of the first grasping portion **21**, and configured to engage the work piece (not shown for clarity) including a plurality of guides **32** formed in the grasping portion **28** and the gripping elements **26**. The guides **32** are formed as grooves in the grasping portion **28** that do not extend entirely through the first element **22**. A guide slot **31** is disposed within each guide **32** and extends entirely through reduced guide portion of the first element **22**. It is within the teachings of the present disclosure that the guides **32** may be formed in the first element **22** in any suitable manner. The groove-like configuration of the guides **32** provides additional support for the gripping elements **26** in that the floor **33** of the guides, in which the guide slots **31** are formed provides an additional guide surface for the gripping elements **26** and facilitates resistance to twisting of the gripping elements **26**.

The gripping elements **26** each include a body portion **34**, adapted for engaging the work piece and arm portion **36**, configured to engage one of the guides **32** and associated guide floor **33**, and a force transfer element **38** contiguous with or preferably connected to the arm portion **36**. It is within the teachings of the present disclosure that the gripping elements **26** may be formed in any suitable manner or configuration and that the force transfer element be configured in any suitable manner. For example, the force transfer element may be a threaded fastener, rivet, pin, shaft, connector or any other suitable device to perform the intended function. The second element **24** further includes an actuation portion **42**, formed substantially as and commonly referred to as a head of a tool, disposed at one end of the second grasping portion **25** having a plurality of slots **46** formed therein. In one embodiment, each of the slots **46** has a first section **48** configured to engage one of the force transfer elements **38** such that movement of the second element **24** with respect to the first element **22** simultaneously actuates the first sections **48** to contact the force transfer elements **38** along a path defined by the first section thereby actuating the gripping elements **26** along the guides **32** and guide slots **33**.

It will be recognized by those of skill in the art that the first sections define a path which generally decreases in radially measurement from a center of an actuation portion **42** from a first outer end to a second inner end. In another embodiment, the paths may generally increase in terms of radially measurement from the center of the actuation portion **42**, such that relative movement between first and second elements generates an outer motion of the gripping elements originally disposed adjacent center of the actuation portion or gripping portion. Alternatively, the guides, slots, and force transfer elements may be configured to interact in any number of different ways to move the gripping or work piece engaging element.

In this embodiment, the body portion **34** include an extension **100** to facilitate increased area of the body portion for gripping the work piece. In one embodiment, the first element **22** may further include a plurality of aligning elements **58** for engaging a second section of the slots. Each aligning element **58** is disposed between adjacent pair of guides **32** and extends parallel to the fourth transfer element **38** and may be configured as the force transfer elements to provide the intended function. The remaining structural and functional elements and aspects of this embodiment of the present disclosure may be configured as any of the like structure and functional aspects of the other embodiments disclosed herein.

FIG. **39** is an exploded view and FIG. **40** is a top plan view of another embodiment of an adjustable gripping tool **20** in accordance with the principal aspects of the present disclosure. In this embodiment, the second element **24** includes a pair of second elements. Each of these second elements **24** includes an actuation portion **42** including at least one slot **46** having a first section **48**.

The second element **24** further includes a grasping portion **25** operatively coupled to the first element **22**. In this embodiment, a rivet, fastener or other suitable or like device **200** engages the generally aligned apertures **202** of the first and second elements to operatively couple the grasping portion **25** to the first element **22**. It is within the teachings of the present invention that any other suitable device may be used to provide such operative coupling as will be recognized by one of skill in the art.

The grasping portion **25** is operatively associated with the actuation portion **42** in meshing engagement. In this embodiment, meshing engagement is defined by cooperative contact between at least one tooth **204** and at least one groove **206**. It is within the teaching of the present invention that any number of cooperative tooth and groove combinations may be used. For example, in one embodiment one tooth or groove may be formed on the grasping portion **25** and a complimentary groove or tooth may be formed on the actuation portion **42**. In another example, a plurality of teeth or grooves may be formed on the grasping portion **25** and a complimentary groove or teeth may be formed on the actuation portion **42**. Furthermore, it is within the teachings of the present disclosure that gear multiplication/leverage or other mechanical advantage may be designed into such meshing engagement and that any suitable structure to provide the functionality of mechanical leverage for advantage may be used. For example, in one embodiment, different gear ratios may be used to facilitate the desired advantage. The remaining struc-

tural and functional elements and aspects of this embodiment of the present disclosure may be configured as any of the like structure and functional aspects of the other embodiments disclosed herein.

FIG. **41** is a top plan view of another embodiment of adjustable gripping tool **20** in accordance with the principal aspects of the present disclosure. The adjustable gripping tool **20**, as shown in FIG. **41**, is disposed in a first operative position. FIG. **42** is another top plan view of the embodiment of the adjustable gripping tool **20** of FIG. **41** wherein the adjustable gripping tool **20** is disposed in a second operative position. FIG. **43** is an exploded view of the adjustable gripping tool **20** of FIGS. **41** and **42**. In this embodiment, the adjustable gripping tool **20** primarily includes a second element **24** that includes a pair of second elements. Each of the second elements **24** includes an actuation portion **42** including at least one slot **46** having a first section **48**. Each at least one slot first section **48** formed in one of the pair of second elements **210** defines a one path **212** and each at least one slot for section **48** formed in another of the pair of second elements **214** defines another path **216**. The one path **212** has a generally clockwise orientation, in that, as the path extends from an inner end to an outer end, such extension is generally in the direction of clockwise. The another path **216** has a generally counter-clockwise orientation, in that, as the path extends from an inner end to an outer end, such extension is generally in the direction of counter-clockwise. As best shown in FIGS. **41** and **42**, the one path **212** and the another path **216** cooperatively engage the force transfer element of one said at least one gripping element **26** to actuate each said at least one gripping element **26** along respective said at least one guide **32**. It is within the teachings of the present invention that the orientation of the paths defined above is not limiting in any sense, rather such description is a useful for explaining the functional aspects of this embodiment. Essentially, the paths extending in different directions yet cooperatively acting on the force transfer element facilitate increased mechanical advantage against the force transfer element and hence the gripping elements. Accordingly, a more secure grip can be achieved thereby. The remaining structural and functional elements and aspects of this embodiment of the present disclosure may be configured as any of the like structure and functional aspects of the other embodiments disclosed herein.

FIG. **44** is a top plan view of another embodiment of an adjustable gripping tool **20** in accordance with the principal aspects of the present disclosure. The adjustable gripping tool, as shown in FIG. **44**, is disposed in a first operative position. FIG. **45** is another top plan view of the embodiment of the adjustable gripping tool **20** of FIG. **44** shown disposed in a second operative position. FIG. **46** is an exploded view of the adjustable gripping tool **20** of FIGS. **44** and **45**. In this embodiment, the adjustable gripping **20** includes a one second element **24**A and an another second element **24**B connected for relative movement which generates movement of at least one gripping element **26**. Each at least one gripping element **26** includes a body portion **34** and a force transfer element **38** contiguous with the body portion **34**. The one second element **24**A and the another second element **24**B each include an actuation portion **42** including at least one slot **46** having a first section **48**. Each at least one slot first section **48** formed in the one second element **24**A defines a one path **212** and each at least one slot first section **48** formed in another second element **24**B defines another path **216**. The one path **212** and the another path **216** cooperatively engage the force transfer element **38** of one said at least one gripping element **26** to actuate each said at least one gripping element **26** into engagement with the work piece. In this embodiment, the one path has a generally clockwise orientation and the another path **216** has a generally counter-clockwise orientation. It would be recognized by those of ordinary skill in the art that the orientation of either of the paths may be reversed to facilitate any desired function. The remaining structural and functional elements and aspects of this embodiment of the present disclosure may be configured as any of the like structure and functional aspects of the other embodiments disclosed herein.

This disclosure is not limited to the details of the apparatus depicted and other modification and applications may be contemplated. For example, the force transfer elements and aligning elements may be changed as desired for other like bearing elements. The gripping elements themselves may be varied in size, shape, surface finish, body configuration, arm configuration or quantity. And the gripping elements may have a cutter, roller or blade attached to perform cutting or scoring operations. Also, the size, shape and position of the openings may be altered as desired to suit particular applications. Further, the first and second elements, gripping elements and other components of the various embodiments of the gripping tool described above may be formed from any suitable material, including without limitation, metal, plastic, composite, natural, synthetic or any other material. Certain other changes may be made in the above-described apparatus without departing from true spirit and scope of the disclosure here involved. It is intended, therefor that the subject matter of the above depiction shall be interpreted as illustrated and not in a limiting sense. The actual scope of the disclosure is intended to be defined in the following claims when viewed in their proper perspective based on the related art.

What is claimed is:

1. An adjustable gripping tool for engaging a work piece to impart work thereto, the tool comprising:

(a) a first element and a second element connected for relative movement which generates movement of at least one gripping element;

(b) the first element including a gripping portion configured to engage the work piece including at least one guide defined in the gripping portion and said at least one gripping element;

(c) each at least one gripping element including a body portion adapted for engaging the work piece, an arm portion configured to engage one said at least one guide and a force transfer element contiguous with the arm portion;

(d) the second element including an actuation portion having at least one slot therein, each said at least one slot having a first section configured to engage the force transfer element of one said at least one gripping element, such that movement of the second element with respect to the first element actuates each at least one first section to contact and move each respective force transfer element thereby actuating each said at least one gripping element along respective said at least one guide, wherein the first element further includes at least one aligning element such that each said at least one aligning element is disposed between an adjacent pair of guides and extends parallel to the force transfer elements.

2. The gripping tool as recited in claim **1**, wherein the first element includes a pair of elements disposed on opposing sides of the second element.

3. The gripping tool as recited in claim **1**, wherein the arm portion of the gripping elements further includes a pair of arms disposed at opposite ends of the body portion such that the gripping elements are substantially U-shaped.

4. The gripping tool as recited in claim **1**, wherein at least one of the slots further includes a second section extending from the first section, such that one said at least one aligning element engages one of the second sections so that during relative movement between the first element and the second element the first and second elements remain generally aligned.

5. The gripping tool as recited in claim **4**, wherein the first and second sections are divergent.

6. The gripping tool as recited in claim **1**, wherein the gripping elements which perform one function may be replaced with gripping elements that perform a different function.

7. The gripping tool as recited in claim **1**, wherein the gripping elements score and cut.

8. The gripping tool as recited in claim **1**, wherein movement of said at least one gripping element is linear.

9. The gripping tool as recited in claim **1**, wherein movement of said at least one gripping element is curvilinear.

10. The gripping tool as recited in claim **1**, wherein each said at least one guide extends radially.

11. The gripping tool as recited in claim **1**, wherein each said at least one guide extends along a curvilinear path.

12. The gripping tool as recited in claim **1**, wherein each at least one gripping element is configured as a cutting wheel that movably engages the work piece to facilitate severing of the work piece by movement of the tool about the work piece after movement of the second element with respect to the first element.

13. The gripping tool as recited in claim **1**, wherein each at least one gripping element includes an extension that projects from the gripping element to engage an interior of the work piece.

14. The gripping tool as recited in claim **13**, wherein said at least one gripping element is configured to engage a first dimensioned work piece with the first and second elements disposed in a first operative position and a second dimensioned work piece with the first and second elements disposed in a second operative position, such that the first dimensioned work piece is smaller than the second dimensioned work piece.

15. The gripping tool as recited in claim **13**, wherein said extension is configured to facilitate a crimping operation.

16. The gripping tool as recited in claim **13**, wherein said extension defines a pocket between the extension and the gripping element to receive the work piece.

17. The gripping tool as recited in claim **13**, wherein said extension is configured to facilitate chasing threads.

18. The gripping tool as recited in claim **1**, wherein each at least one gripping element has a planar configuration.

19. The gripping tool as recited in claim **18**, wherein each at least one gripping element has a thickness equivalent to a thickness of the respective associated first element.

20. The gripping tool as recited in claim **1**, wherein each at least one gripping element body portion is configured to have a "V" shape where a vertex of the "V" shape is directed toward the force transfer element.

21. The gripping tool as recited in claim **1**, wherein a cover plate is connected to the first element to reinforce the tool.

22. The gripping tool as recited in claim **21**, wherein the cover plate has a penannular configuration and is attached to the gripping portion.

23. The gripping tools as recited in claim **21**, wherein the cover plate has a dimension that is generally equivalent to a first element dimension and is attached over the first element.

24. The gripping tools as recited in claim **21**, wherein the cover plate is configured as a receptacle defined by a pair of cover portions offset by a margin portion to engage a pair of first elements.

25. The gripping tool as recited in claim **1**, wherein said at least one gripping element is configured to engage a non-standard work piece.

26. The gripping tool as recited in claim **25**, wherein the non-standard work piece is a security fastener.

27. The gripping tool as recited in claim **1**, wherein said at least one gripping element is configured to cooperatively function to facilitate chasing threads.

28. The gripping tool as recited in claim **1**, wherein the first element includes a pair of first elements and a backbone connecting a portion of common edges of the pair of first elements, the pair of first elements and the backbone integrally formed from a unitary blank.

29. The gripping tool as recited in claim **1**, wherein the body portion of each at least one gripping element includes an extension that projects from the gripping element to define a second body portion adapted for engaging the work piece such that the body portion facilitates a first range of gripping ability and the second body portion facilitates a second range of gripping ability.

30. The gripping tool as recited in claim **1**, wherein the first element and the second element have a penannular configuration.

31. The gripping tool as recited in claim **1**, wherein said at least one slot extends partly through the second element.

32. The gripping tool as recited in claim **1**, wherein said at least one guide extends partly through the first element.

33. The gripping tool as recited in claim **1**, wherein the first element includes a first opening formed in the gripping portion from which the guides extend.

34. The gripping tool as recited in claim **1**, wherein the second element includes a second opening formed in the actuation portion such that each said at least one slot is disposed adjacent the second opening external thereto.

35. The gripping tool as recited in claim **1**, wherein the first element includes a first opening formed in the gripping portion and the second element includes a second opening formed in the actuation portion such that the first and second openings are generally aligned.

36. The gripping tool as recited in claim **1**, wherein the second element further includes a grasping portion operatively coupled to the first element and operatively associated with the actuation portion in meshing engagement.

37. The gripping tool as recited in claim **36**, wherein the meshing engagement is defined by cooperative contact between at least one tooth and at least one groove.

38. The gripping tool as recited in claim **1**, wherein the second element includes a pair of second elements, each with an actuation portion including at least one slot having a first section, and wherein each at least one slot first section formed in one of the pair of second elements defines a one path and each at least one slot first section formed in another of the pair of second elements defines an another path.

39. The gripping tool as recited in claim **38**, wherein the one path has a generally clockwise orientation and the another path has a generally counter-clockwise orientation.

40. The gripping tool as recited in claim **38**, wherein the one path and the another path cooperatively engage the force transfer element of one said at least one gripping element to actuate each said at least one gripping element along respective said at least one guide.

41. The gripping tool as recited in claim **1**, wherein at least one of said at least one slot includes a third section defined within the first section, such that each gripping element associated with the third section of said at least one of said at least one slot is actuated along respective said at least one guide at a different rate.

* * * * *

EXHIBIT B

US00D618974S

(12) **United States Design Patent**
Brown

(10) **Patent No.: US D618,974 S**
(45) **Date of Patent: ** Jul. 6, 2010**

(54) **HYDRANT TOOL**

(75) Inventor: **Daniel P. Brown**, Palos Park, IL (US)

(73) Assignee: **Loggerhead Tools, LLC**, Palos Park, IL (US)

(**) Term: **14 Years**

(21) Appl. No.: **29/345,063**

(22) Filed: **Oct. 8, 2009**

(51) **LOC (9) Cl.** **08-05**
(52) **U.S. Cl.** **D8/27**
(58) **Field of Classification Search** D8/21–30; 81/60, 177.1, 177.85, 121.1, 124.3, 165–170, 81/110.1, 176.2, 124.6, 176.1, 176.15, 177.2; 16/110.1; D15/144.1; 219/75, 227, 229, 219/121.16, 121.18
See application file for complete search history.

(56) **References Cited**

U.S. PATENT DOCUMENTS

599,837	A *	3/1898	Harris	81/90.3
877,773	A	1/1908	Holm	
912,117	A	2/1909	Green	
1,393,267	A	10/1921	Cousins	
1,450,641	A	4/1923	Ograbisz	
2,096,016	A	10/1937	Weishampel	
2,292,391	A	8/1942	Merriman et al.	
2,409,549	A	10/1946	Djidics	
2,547,534	A	4/1951	Oliver	
2,573,421	A	10/1951	Feiring	
2,580,247	A	12/1951	Secondi et al.	
2,674,911	A	4/1954	Theis	
2,687,661	A	8/1954	Richardson	
2,714,827	A	8/1955	Kusiv et al.	
2,739,381	A	3/1956	Petersen	
2,753,742	A	7/1956	Buchanan	
2,787,925	A	4/1957	Buchanan et al.	
2,884,826	A	5/1959	Bruhn	

(Continued)

FOREIGN PATENT DOCUMENTS

DE	259320	C	5/1913

(Continued)

OTHER PUBLICATIONS

Nagel, Matthew. Examination Report for New Zealand Patent Application No. 562104. Aug. 7, 2009, Intellectual Property Office of New Zealand.

(Continued)

Primary Examiner—Raphael Barkai
Assistant Examiner—Randall H Gholson
(74) *Attorney, Agent, or Firm*—Vedder Price P.C.

(57) **CLAIM**

The ornamental design for a hydrant tool, as shown and described.

DESCRIPTION

FIG. **1** is a perspective view of the hydrant tool;

FIG. **2** is a front elevation view of the hydrant tool of FIG. **1**;

FIG. **3** is a rear elevation view of the hydrant tool of FIG. **1**;

FIG. **4** is a first side elevation view of the hydrant tool of FIG. **1**;

FIG. **5** is a second side elevation view of the hydrant tool of FIG. **1**;

FIG. **6** is a top plan view of the hydrant tool of FIG. **1**; and,

FIG. **7** is a bottom plan view of the hydrant tool of FIG. **1**.

1 Claim, 4 Drawing Sheets

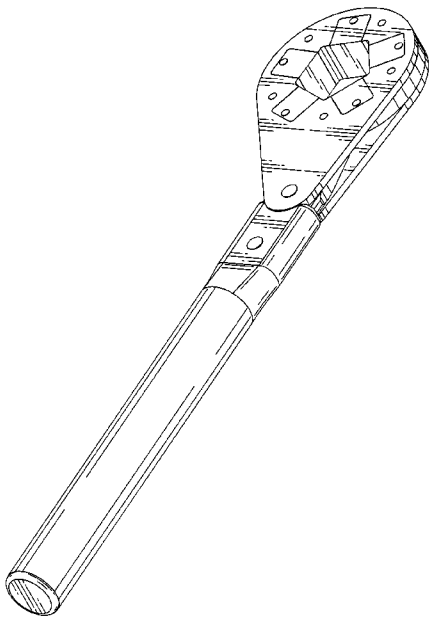

U.S. PATENT DOCUMENTS

2,952,175	A		9/1960	Edlen et al.	
2,991,675	A		7/1961	Ustin	
3,177,695	A		4/1965	Van Oort	
3,199,334	A		8/1965	Holmes et al.	
3,226,968	A		1/1966	Holmes	
3,624,682	A		11/1971	Kowal	
3,664,213	A		5/1972	Anati	
3,672,050	A		6/1972	Hanback	
3,713,322	A		1/1973	Fischer	
3,901,107	A		8/1975	Halls	
4,080,733	A		3/1978	Clegg	
4,112,792	A		9/1978	Guimarin	
4,277,991	A		7/1981	Stubenrauch	
4,333,357	A		6/1982	Vinther	
4,542,668	A		9/1985	Wiener	
4,651,771	A	*	3/1987	Borenstein et al.	137/296
4,724,730	A		2/1988	Mader et al.	
4,770,070	A		9/1988	Sowers	
4,793,225	A		12/1988	Berkich	
4,813,309	A		3/1989	Kang	
4,847,997	A		7/1989	Petty	
4,858,316	A		8/1989	Dubey	
4,873,899	A	*	10/1989	Mazurek	81/63
5,033,153	A		7/1991	Post	
5,033,501	A	*	7/1991	Stehling	137/296
5,067,376	A		11/1991	Fossella	
5,076,121	A		12/1991	Fossella	
5,090,273	A		2/1992	Fossella	
5,095,782	A		3/1992	Galea	
D330,835	S	*	11/1992	Culpepper	D8/23
D334,122	S	*	3/1993	Bang	D8/21
5,206,996	A		5/1993	McDaniel	
5,207,129	A		5/1993	Fosella	
5,235,878	A		8/1993	Young	
5,249,487	A		10/1993	Armfield	
5,249,490	A		10/1993	Kennel	
5,255,576	A	*	10/1993	Keith	81/63
5,261,263	A		11/1993	Whitesell	
5,305,670	A		4/1994	Fossella et al.	
5,345,682	A		9/1994	Dubinsky et al.	
5,375,309	A		12/1994	Dunn	
5,377,566	A		1/1995	Mandigo	
5,448,931	A		9/1995	Fosella	
5,515,609	A		5/1996	Sperti	
5,531,549	A		7/1996	Fossella	
5,557,993	A		9/1996	Austin	
5,581,886	A		12/1996	Sesser et al.	
5,809,852	A		9/1998	Haskell	
5,819,607	A		10/1998	Carnesi	
5,893,306	A		4/1999	Owoc	
5,894,768	A		4/1999	Malkin et al.	
5,907,906	A		6/1999	Sweeney	
5,918,511	A		7/1999	Sabbaghian et al.	
5,960,683	A		10/1999	Malkin et al.	
6,073,522	A		6/2000	Carnesi	
6,085,618	A	*	7/2000	Macor	81/177.85
6,098,506	A		8/2000	Clegg	
6,164,107	A		12/2000	Korba, Jr.	
6,186,034	B1		2/2001	Lamons	
6,227,076	B1		5/2001	Murray	
6,279,429	B1		8/2001	Boyer	
6,314,842	B1		11/2001	Hsieh	
6,341,544	B1		1/2002	Falzone	
6,401,340	B1		6/2002	King	
6,418,820	B1		7/2002	Lamond et al.	
6,530,298	B1		3/2003	Steffe	
D476,204	S	*	6/2003	Chang-Kao	D8/28
6,575,060	B1	*	6/2003	Tseng et al.	81/63.2
6,658,739	B1		12/2003	Huang	
6,751,867	B1		6/2004	Whyte	
6,834,569	B2		12/2004	Wang	
6,889,579	B1	*	5/2005	Brown	81/90.2
2002/0144575	A1		10/2002	Niven	
2003/0121376	A1		7/2003	Huang	
2004/0025647	A1		2/2004	Wang	
2004/0244543	A1	*	12/2004	Barnett et al.	81/62
2006/0225538	A1		10/2006	Brown	

FOREIGN PATENT DOCUMENTS

DE	1452623	A1	7/1970
EP	543815	B1	1/2000
GB	2265891	A	10/1993
JP	S5087599		12/1948
JP	S5630511		8/1954
JP	S57181516		5/1956
JP	2001286955		10/2001

OTHER PUBLICATIONS

European Patent Office. Supplementary Search Report cited in EP Application No. 05 72 2450. Jun. 21, 2007.

* cited by examiner

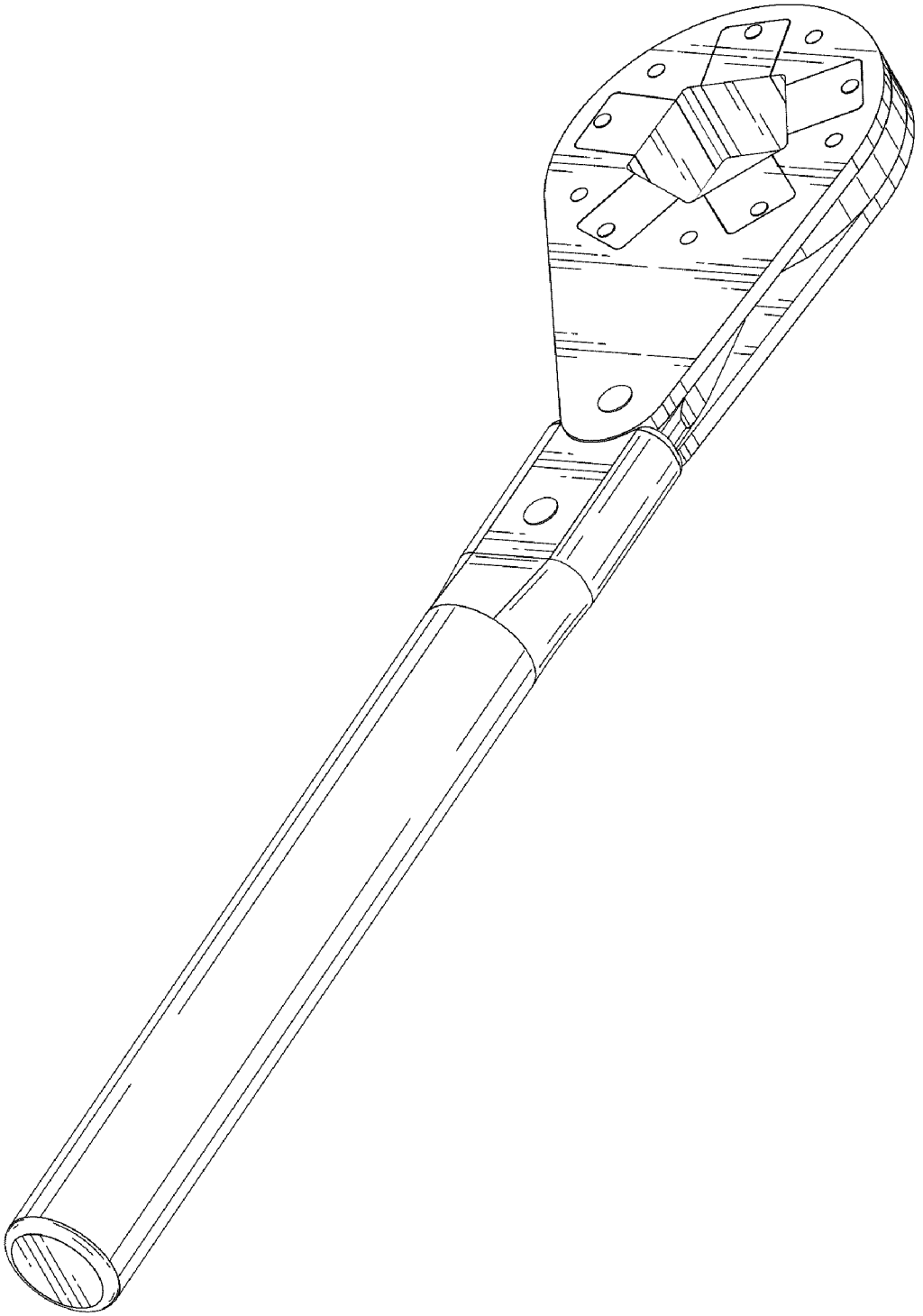

FIG. 1

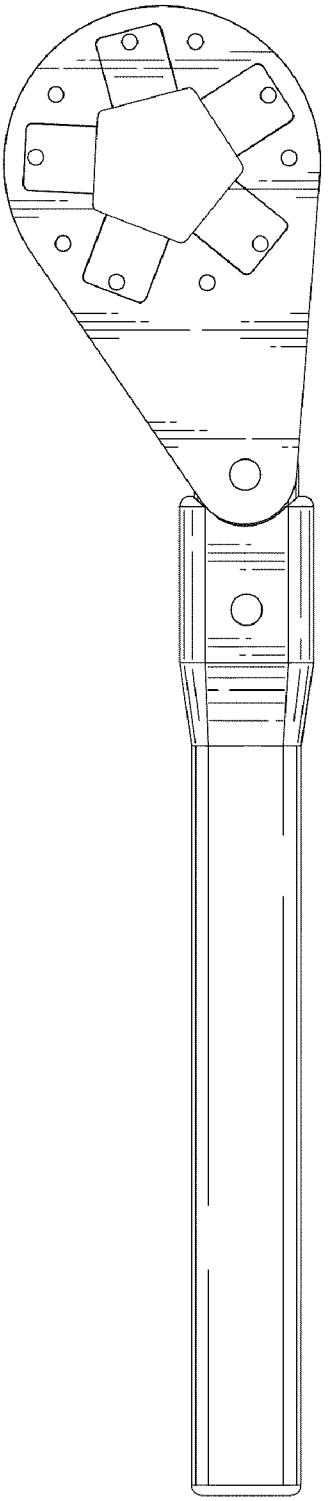

FIG. 2

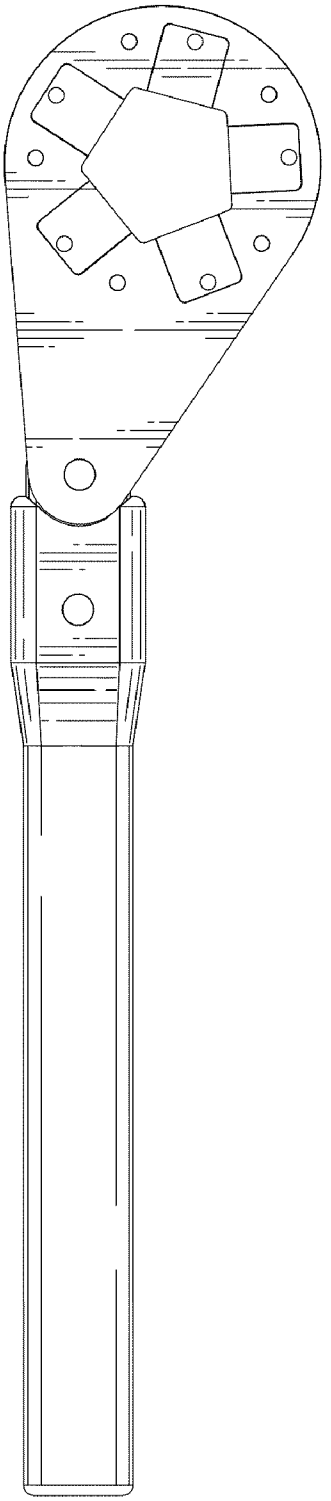

FIG. 3

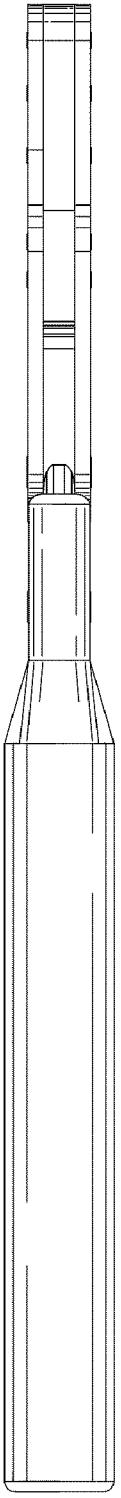

FIG. 4

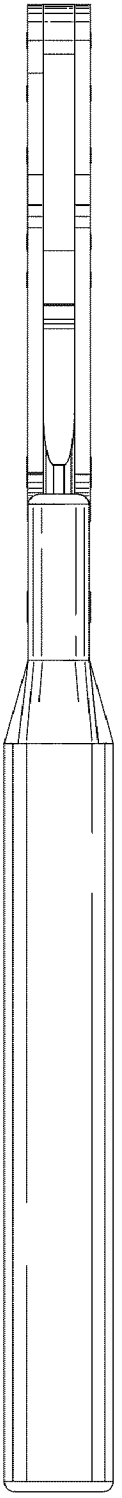

FIG. 5

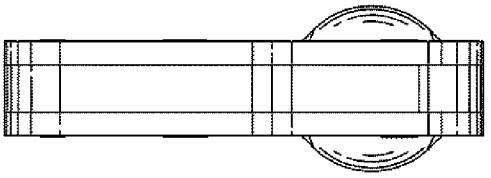

FIG. 6

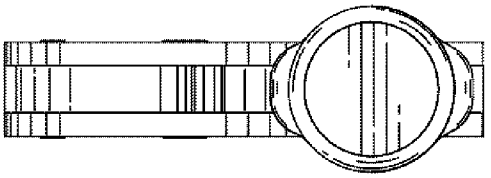

FIG. 7

ADJUSTABLE GRIPPING TOOL

Related Applications

[0001] This application is a continuation-in-part of and claims the benefit of and priority from U.S. Application Ser. No. 11/102,966, filed April 11, 2005 and is hereby fully incorporated herein by reference, which is a continuation-in-part of and claims the benefit of and priority from U.S. Application Ser. No. 10/763,489, filed January 23, 2004, now issued as U.S. Patent No. 6,889,579 on May 10, 2005, and is hereby fully incorporated herein by reference.

Background

[0002] This disclosure pertains to a hand tool and more particularly, to an adjustable gripping tool which, as a result of manual operation, self-energizes, automatically configures to engage differently dimensioned and shaped work pieces and de-energizes upon release of actuating force.

[0003] Various types of adjustable gripping tools are known in the art. Specifically, several known adjustable gripping tools are embodied in the form of a "crescent" wrench, an adjustable socket wrench, an adjustable hydrant wrench, pipe wrench, vice grips, crimpers, bolt and nut cutters, pipe and tube cutters, and various other "plier-type" gripping tools. The adjustable hydrant wrench includes a housing having the same general shape as a hydrant fastener and a handle that is threadingly adjustable with the housing to compensate for differently sized hydrant fasteners. During the last 100 plus years, municipalities installed fire hydrants having pentagonal-shaped (five

sided) fastener sizes that range between 1¼" and 1¾", because for the longest time there was no national standard for hydrant design or specification. Accordingly, most cities must contend with the legacy issues of these various designs. Other issues that are presented include old and aging metal and worn hydrant fasteners as a result of using an incorrect or improper wrench on corroded or frozen nuts. Major disadvantages of existing hydrant wrenches are that they do not fully engage the hydrant fasteners and require manual manipulation to threadingly adjust and lock down on the hydrant fastener prior to applying leverage to the hydrant fastener.

[0004] Therefore, there exists a need in the art for an adjustable gripping tool that, as a result of manual operation, self-energizes the tool gripping action, may be automatically sized and resized to engage a work piece, de-energizes upon release of actuation force, that has a broad range of dimensional capability, engages work pieces axially and radially and provides offsetting forces for stability in operation. Beyond the ability to resize the gripping range, the gripping tool of the present disclosure symmetrically translates the force applied to the gripping tool onto the work piece in a symmetrically balanced and mechanically advantaged and efficient way. Thus, an even distribution of gripping and rotational force about the work piece is achieved; thereby allowing for the most efficient distribution of mechanical force about the work piece. For any given force required to manipulate the work pieces, the gripping tool of the present disclosure will accomplish the work with the minimal distortion or deformation under load of the work piece by distributing the work force over the largest area of the work piece. Other

advantages of the adjustable gripping tool of the present disclosure include decreased costs, increased productivity and multi-access engagement of the work piece resulting in a mechanically advantaged, efficient, even and balanced distribution of working forces.

Brief Description of the Drawings

[0005] Certain embodiments are shown in the drawings. However, it is understood that the present disclosure is not limited to the arrangements and instrumentality shown in the attached drawings, wherein:

[0006] FIG. 1 is an exploded perspective view of an adjustable gripping tool in accordance with the principles of the disclosure set forth in U.S. Patent No. 6,889,579, which is incorporated herein by reference.

[0007] FIG. 2 is a top plan view of an adjustable gripping tool in accordance with the principles of the present disclosure.

[0008] FIG. 3 is a perspective view of the adjustable gripping tool of FIG. 2 engaging a work piece to impart work thereto.

[0009] FIG. 4 is an exploded perspective view of the adjustable gripping tool of FIG. 2.

[0010] FIG. 5 is a sectioned view of the adjustable gripping tool of FIG. 2 wherein one element of a gripping portion and a portion of a handle have been removed, and gripping elements are not actuated.

[0011] FIG. 6 is a sectioned view of the adjustable gripping tool of FIG. 2 wherein one element of the gripping portion and a portion of the handle have been removed, and gripping elements are actuated as a result of relative movement between the handle and a second element.

Detailed Description of a Preferred Embodiment of the Disclosure

[0012] For the purposes of promoting and understanding the principles disclosed herein, reference will now be made to the preferred embodiments illustrated in the drawings and specific language will be used to describe the same. It will nevertheless be understood that no limitation of the scope is thereby intended. Such alterations and further modifications in the illustrated device and such further applications are the principles disclosed as illustrated therein as being contemplated as would normally occur to one skilled in the art to which this disclosure relates.

[0013] One principal aspect of the present disclosure is directed to an adjustable gripping tool for engaging a work piece to impart work thereto. The gripping tool includes a first element and a second element disposed for relative movement to generate movement of at least one gripping element. The first element includes a handle and a gripping portion movably connected to the handle and adapted to engage the work piece. The handle includes a first end that operatively engages the second element. The gripping portion includes at least one guide and at least one gripping element. Each gripping element may include a body portion adapted for engaging the work piece, an arm portion configured to engage one of the guides and/or a force transfer element contiguous with the arm portion. The second element includes an actuation portion having at least one slot. Each slot has a section configured to engage one of the force transfer elements such that movement of the second element with respect to the first element actuates each at least one section to

contact and move each respective force transfer element thereby actuating each gripping element along the respective guide.

[0014] FIG. 1 illustrates in an exploded perspective view of the adjustable gripping tool 20 in accordance with principles of the disclosure set forth in U.S. Patent No. 6,889,579, which is incorporated herein by reference. No further description of the tool 20 will be set forth herein for the sake of brevity. Similar structural and functional aspects may be repeated herein to describe this present disclosure.

[0015] FIG. 2 illustrates a top plan view of an adjustable gripping tool 100 in accordance with the principles of the present disclosure. The adjustable gripping tool 100 primarily includes a first element 102 and a second element 104 disposed for relative movement there between in order to generate movement of at least one gripping element 106. In one embodiment of the present disclosure, the first element 102 includes a handle 108 and a gripping portion 110 that is movably connected to the handle. The gripping portion 110 is adapted to engage a work piece as will be described in more detail below.

[0016] The handle 108 includes a first end 112 that operatively engages the second element 104. The gripping portion 110 includes at least one guide 114 defined therein and the at least one gripping element 106.

[0017] Each gripping element 106 preferably includes a body portion 116 that is adapted for engaging the work piece (as will be discussed in more detail below). Each gripping element 106 may also include an arm portion 118 configured to engage a respective guide 114 and may also further

include a force transfer element 120 that is contiguous with the arm portion 118.

[0018] It is within the teachings of the present disclosure that the guides 114 may be formed in any suitable configuration. For example, the guides may be formed as groves, channels or any other suitable configuration. Not by way of limitation, but such structural configuration is often guided by manufacturing methods or capabilities. Additionally, the guides 114 may be curvilinear or linear. It is within the teachings of the present disclosure that the gripping elements may be integrally formed in any suitable manner. It will also be recognized that the gripping elements may be formed in any other suitable manner as desired to achieve any intended purpose or function.

[0019] It is within the teachings of the present disclosure that the gripping elements may have a smooth or rough face with which to engage the work piece, as desired. For example, the rough face may have a grooved, serrated, checked or any other suitable finish. Furthermore, the force transfer elements 120 may be configured as pins or other suitable structure to provide the functions as described herein. It will be recognized by those of skill in the art that the terms used herein are not of a limiting sense. Rather, these terms are used to broadly describe the structure and function herein.

[0020] FIG. 3 is a perspective view of the adjustable gripping tool 100 of FIG. 2 engaging a work piece 200 to impart work thereto. In this embodiment, the work piece is a pentagonal-shaped hydrant fastener. It will be recognized by those of ordinary skill in the art that the gripping tool of the present disclosure may be configured in accordance with the principles of the

structure and function disclosed herein to likewise engage any other differently shaped work piece, regardless of the number of sides or flats. As discussed above and illustrated in this FIG. 3, the gripping tool 100 of this embodiment includes a first element 102 and a second element 104 disposed for relative movement to generate movement of the gripping elements 106 (as will be discussed in more detail below). The first element 102 includes a handle 108 and a gripping portion 110 that is movably connected to the handle 108. Preferably, the gripping portion 110 includes a pair of plates 140, 142 disposed on opposite sides of the handle 108 and each plate is pivotally connected at 144 to the handle 108. It will be recognized by those of ordinary skill in the art that other suitable forms of connection between the handle 108 and gripping portion 110 may be used to achieve the same function. In this embodiment, the second element 104 is disposed between the pair of plates 140, 142. Alignment pins 154 may be used to maintain proper alignment of the second element 104 with respect to the plates 140, 142 and the handle 108. In this FIG. 3, the handle 108 has been moved relative to the gripping portion 110 in the direction indicated by arrow 202. As a result, the second element 104 has likewise been moved (as will be described in more detail below) with respect to the first element 102 so as to move each respective force transfer element 120 and the corresponding gripping element 106 to which the force transfer element 120 is contiguous with the arm portion 118 so that the body portion 116 is contiguous with the work piece 200 so that work may be imparted thereto by further movement of the handle 108 in the direction of arrow 202. The guides 114 ensure that the gripping elements 106 are moved along the

intended path (in this embodiment radial with respect to the first opening 150 provided in the gripping portion 110). It will be recognized by those of ordinary skill in the art that the guide 114 may take any desired shape that corresponds with the arm portion 118 of the gripping element 106 in order to provide the same function. Further, those of ordinary skill in the art will recognize that the embodiment described in this disclosure is directed to an adjustable gripping tool 100 having a five-sided opening with five gripping elements 106 and that any suitably shaped opening and number of gripping elements may be provided in order to provide the intended function.

[0021] In this embodiment, the second element 104 includes a grasping portion 128 formed on an outer perimeter 130 thereof. The grasping portion 128 includes a crenate configuration 132. In this embodiment, the crenate configuration 132 is characterized by a series of teeth 134 and grooves 136. It will be recognized by those of ordinary skill in the art that such teeth and grooves may be configured in a suitable manner or shape in order to achieve the desired function, i.e., meshing engagement for transfer of applied force. Moreover, the shape of the teeth and grooves are preferably complimentary but are not limited as shown.

[0022] FIG. 4 is an exploded perspective view of the adjustable gripping tool 100 of FIG. 2. In this FIG. 4, the first element 102 and second element 104 are disposed for relative movement to generate movement of at least one gripping element 106. The first element 102 includes a handle 108 and a gripping portion 110 that is movably connected to the handle at pivot point 144, as described above. The handle includes a first end 112 that

operatively engages the second element 104. In one embodiment, the first end 112 includes a crenate section 138 for meshing engagement with a complimentary crenate configuration 132 of the grasping portion 128. As discussed above with respect to the crenate configuration 132, the crenate section 138 of the first end 112 is preferably defined by at least one tooth 134 and at least one groove 136. The crenate configuration 132 and crenate section 138 are configured for meshing engagement and accordingly have complimentary structure. It will be recognized by those of ordinary skill in the art that such teeth and grooves may be configured in a suitable manner or shape in order to achieve the desired function, i.e., meshing engagement for transfer of applied force. Moreover, the shape of the teeth and grooves are preferably complimentary but are not limited as shown. Additionally, one of ordinary skill in the art will recognize that the operative engagement between the handle 105 and second element 104 may have any suitable structure to provide the intended function and this disclosure is not so limited.

[0023] The second element 104, in one embodiment, includes an actuation portion 122 that has at least one slot 124 defined or formed therein. Each slot 124 has a first section 126 configured to engage the force transfer element 120 of the gripping element 106. In one embodiment, the arm portion 118 of a gripping element 106 further includes a pair of arms 146, 148 disposed at opposite ends of the body portion 116 such that the gripping elements 106 are substantially U-shaped. In such embodiment, the second element 104 and the actuation portion 122 thereof may be disposed between the pair of arms 146, 148 of the gripping elements 106.

[0024] As mentioned above, the first element 102 and second element 104 are disposed such that movement of the second element 104 with respect to the first element 102 actuates each at least one first section 126 to contact and move the respective force transfer element 120 thereby actuating the respective element 106 along a respective guide 114 into engagement with the work piece (as shown above) to impart work thereto. As mentioned above, alignment pins 154 are connected to each of the plates 140, 142 of the gripping portion 110 and are disposed in a second section 156 of each slot 124 so that the second opening 152 of the actuation portion 122 remains generally concentrically aligned with the first opening 150 of the gripping portion 110 when the crenate section 138 of the first end 112 meshingly engages the crenate configuration 132 of the second element 104 in order to transfer force thereto and subsequently to the force transfer element 120 and finally the gripping elements 106 as a result of movement of the handle 108 with respect to the second elements 104. Each slot 124 is disposed adjacent to the second opening 152 and external thereto.

[0025] FIG. 5 is a sectioned view of the adjustable gripping tool 100 of FIG. 2, wherein one element of the gripping portion 110 and a portion of the handle 108 have been removed for clarity, and the gripping elements 106 are not actuated. In this embodiment, the meshing engagement of the first end 112 and the second element 104 is clearly illustrated, but this disclosure is not limited to what is shown. The crenate configuration 132 that is formed on an outer perimeter 130 of the grasping portion 128 includes a series of teeth 134 and grooves 136. The crenate section 138 formed on the first end 112 likewise

includes a series of teeth 134 and grooves 136. The teeth 134 and grooves 136 on both the second element 104 and first end 112 are configured complimentary for meshing engagement of the crenate configuration 132 and crenate section 138. It will be recognized by one of ordinary skill in the art that the crenate configuration 132 need not be disposed about the entire outer perimeter 130 and may in fact be disposed only adjacent the crenate section 138 to provide the intended function disclosed herein. The force transfer elements 120 are illustrated as disposed in the first section 126 of the slot 124 in the actuation portion 122 because the handle 108 has not been moved relative to the second element 104. The alignment pins 154 are disposed in the second section 156 of the slot 124. In this embodiment, the arm portion 118 includes a pair of arms 146, 148 disposed at opposite ends of the body portion 116 such that the gripping elements 106 are substantially U-shaped. The second element 104 is disposed between the pair of arms 146, 148.

[0026] FIG. 6 is a sectioned view of the adjustable gripping tool 100 of FIG. 2, wherein one element of the gripping portion 110 and a portion of the handle 108 have been removed, and gripping elements 106 are actuated as a result of relative movement between the handle 108 and the second element 104. Movement of the second element 104 with respect to the first element 102 actuates each at least one first section 126 of a slot 124 to contact and move the respective force transfer element 120 thereby actuating each gripping element 106 along the respective guide 114. Consequently, the body portion 116 of each gripping element 106 is disposed in the first opening 150 from

which the guides 114 radially extend, in order to engage an object disposed therein (e.g., such as a work piece as described above).

[0027] It will be recognized by those of skill in the art that the first and second openings 150, 152 need not be precisely concentric in order to operate as disclosed and provided the intended function. Rather, references to concentric alignment shall include any alignment of the first and second openings 150, 152 that permits operation as disclosed. It will be recognized by those of skill in the art that in this embodiment the first sections 126 define a path which generally decreases in terms of radial measurement from a center of the second opening 152 from an outer end to an inner end. Alternatively, the guides, slots and force transfer element may be configured to interact in a number of different ways to move the actuation elements into movement with the gripping or work piece engaging elements.

[0028] In one embodiment, each of the slots 124 further includes a second section 156 extending from the first section 126. It will be recognized by those of skill in the art that the second section 156 defines a path which is generally consistent in terms of radial measurement from the center of the second opening 152 from the inner end to an outer end.

[0029] In one embodiment of the present disclosure, the first element 102 further includes a plurality of alignment pins 154 for engaging the second sections 156. Each alignment pin 154 is disposed between an adjacent pair of guides 114 and extends parallel to the force transfer element 120. Apertures are formed in the plates 140, 142 to receive and engage the alignment pins 154. In operation, each one of the alignment pins 154 engages

one of the second sections 156 so that during relative movement between the first element 102 and the second element 104, the first and second openings 150, 152 remain generally aligned. It will be recognized by those of skill in the art that the second sections 156 engage the alignment pins 154 in response to the forces induced by the divergent path of the first sections 126 on the force transfer elements 120. As a result, not only do the first and second openings 150, 152 remain generally concentrically aligned, but the gripping elements 106 are actuated along the guides 114 with equal, likewise displacement.

[0030] In one embodiment of the present disclosure, the gripping portion 110 includes five gripping elements 106. However, it would be recognized by those of skill in the art, that the gripping portion 110 need include only at least one gripping or engaging element 106 and that any other suitable number of gripping or work piece engaging elements may be provided. In the embodiment with five gripping elements, the adjustable gripping tool may be advantageously used in connection with pentagonal-shaped work pieces where the gripping elements face-load each of the flats of the work piece. Such a configuration is advantageous compared to conventional tools that point-load a pentagonal-shaped fastener at its corners.

[0031] This disclosure is not limited to the details of the apparatus depicted and other modification and applications may be contemplated. For example, the force transfer elements and alignment pins may be changed as desired for other like bearing elements. The gripping elements themselves may be varied in size, shape, surface finish, body configuration, arm configuration or quantity. Also, the size, shape and position of the openings may be altered

as desired to suit particular applications. Further, the first and second elements, gripping elements and other components of the various embodiments of the gripping tool described above may be formed from any suitable material, including without limitation, metal, plastic, composite, natural, synthetic or any other material. Certain other changes may be made in the above-described apparatus without departing from true spirit and scope of the disclosure here involved. It is intended, therefor that the subject matter of the above depiction shall be interpreted as illustrated and not in a limiting sense. The actual scope of the disclosure is intended to be defined in the following claims when viewed in their proper perspective based on the related art.

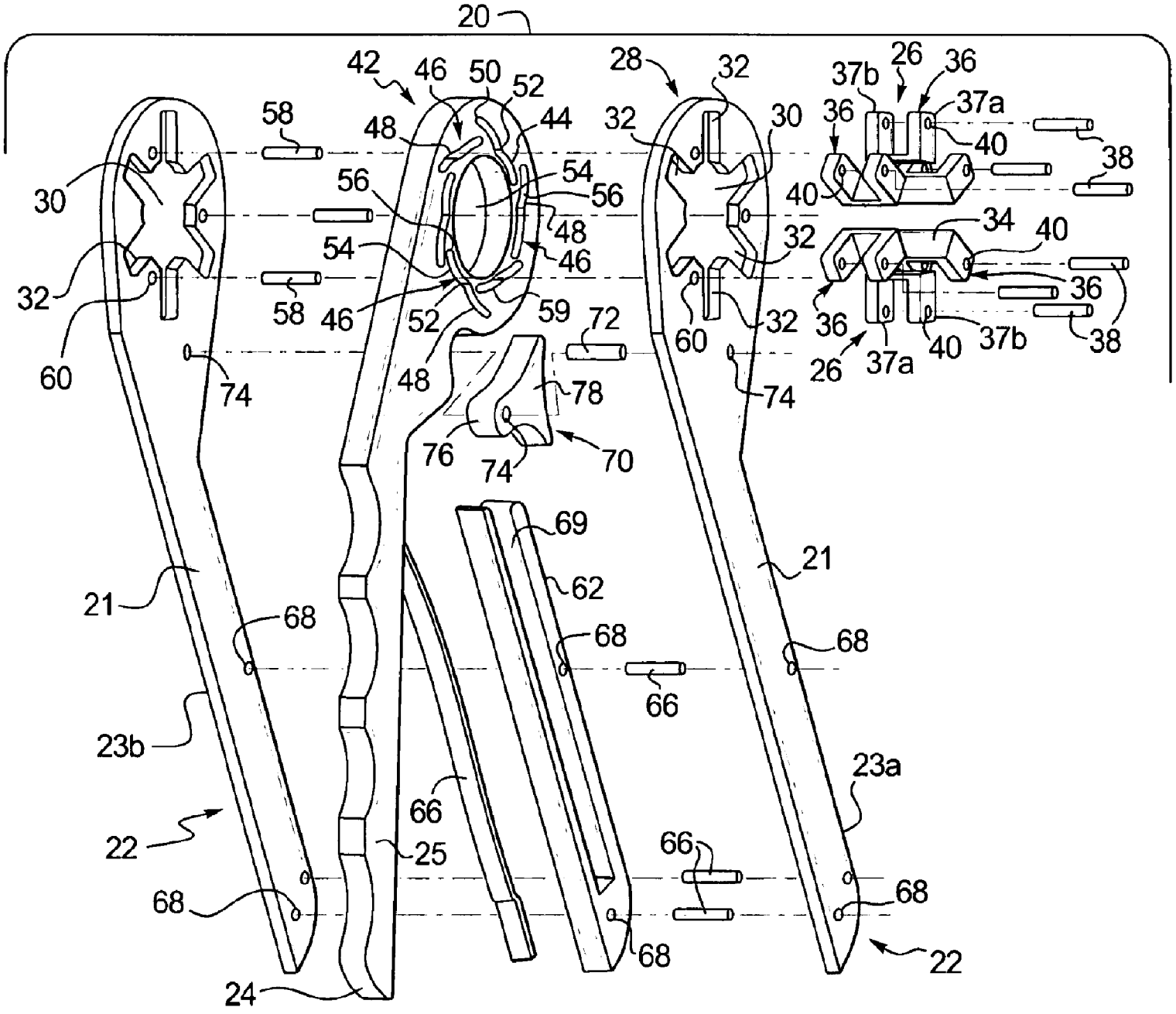
20
42
46
50
52
28
32
37b
26
36
37a
58
48
44
32
30
36
40
38
30
56
54
56
40
34
40
54
48
32
46
32
36
58
46
52
59
72
60
32
36
37b
38
60
74
48
78
74
26
37a
40
76
74
70
69
21
21
62
68
68
68
66
23b
23a
66
22
25
66
68
68
68
22
24

FIG. 1

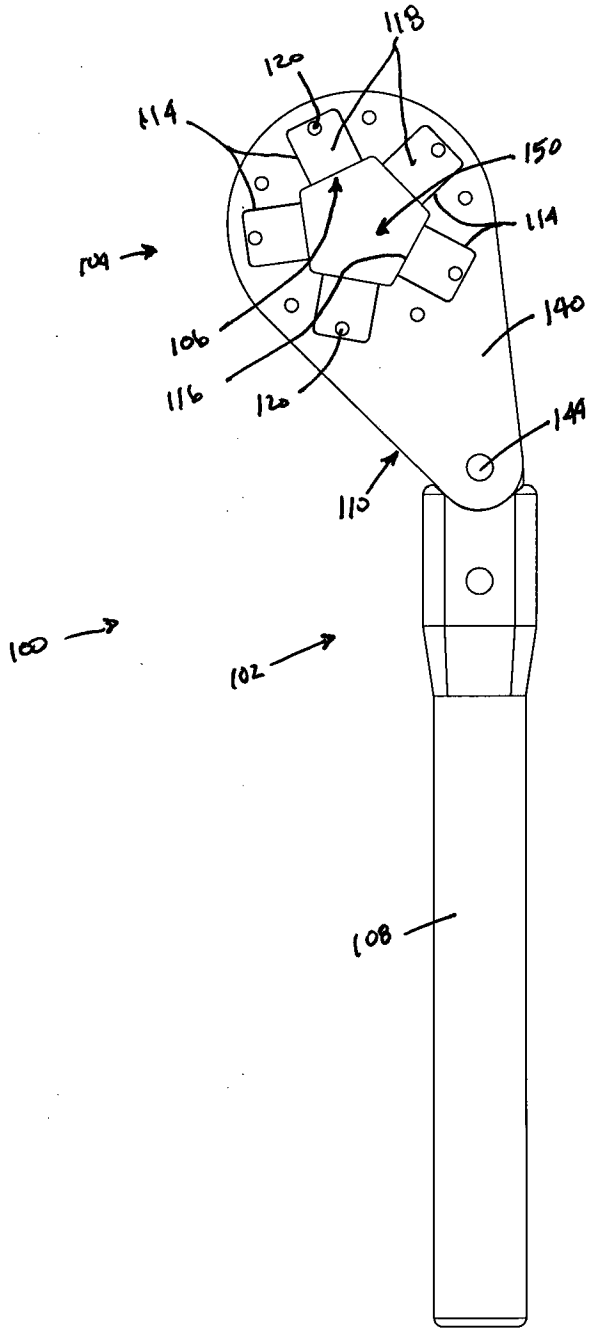

FIG. 2

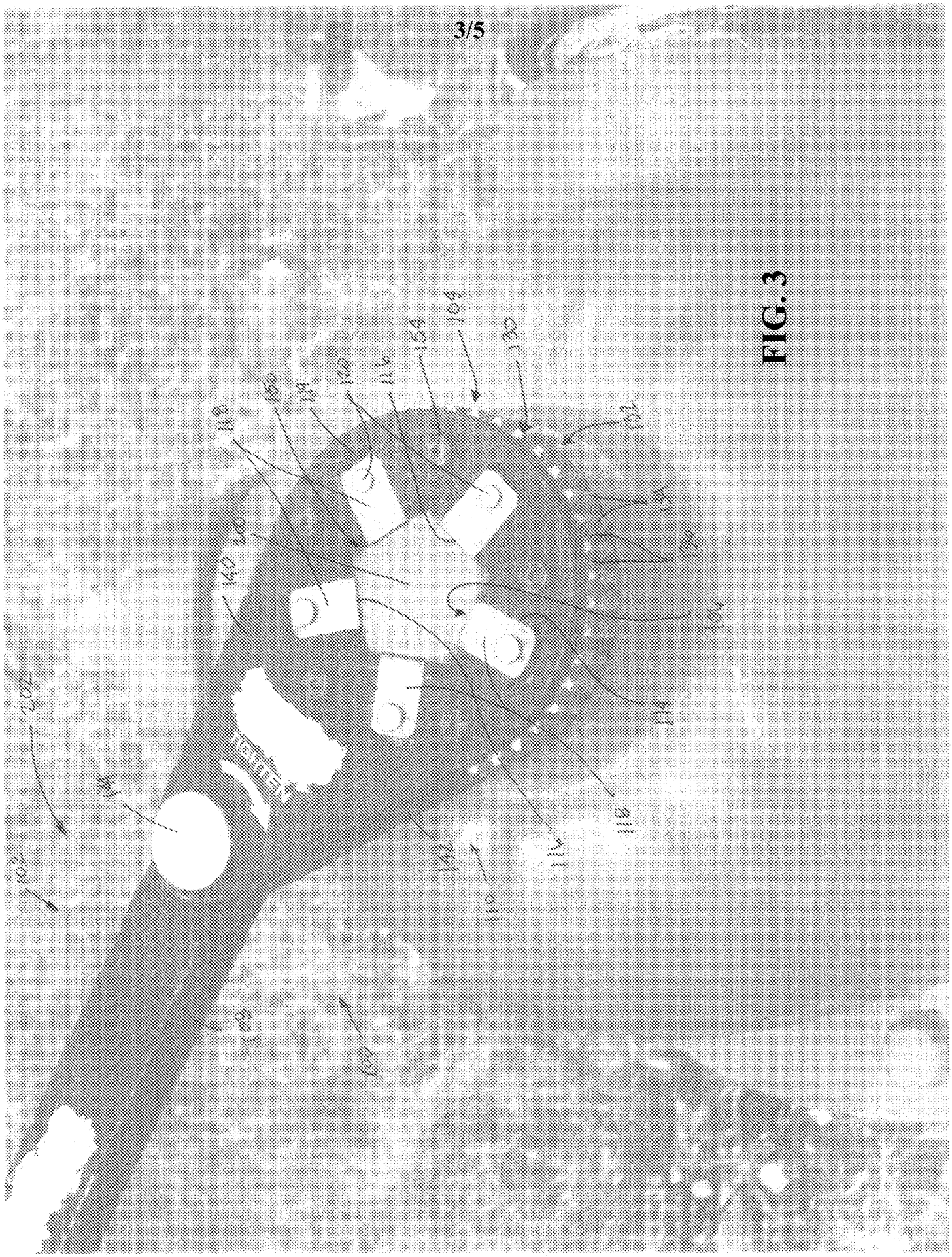
102
102
141
140
140
118
150
154
116
120
104
120
152
134
130
124
114
118
112
142
110
130
128

FIG. 3

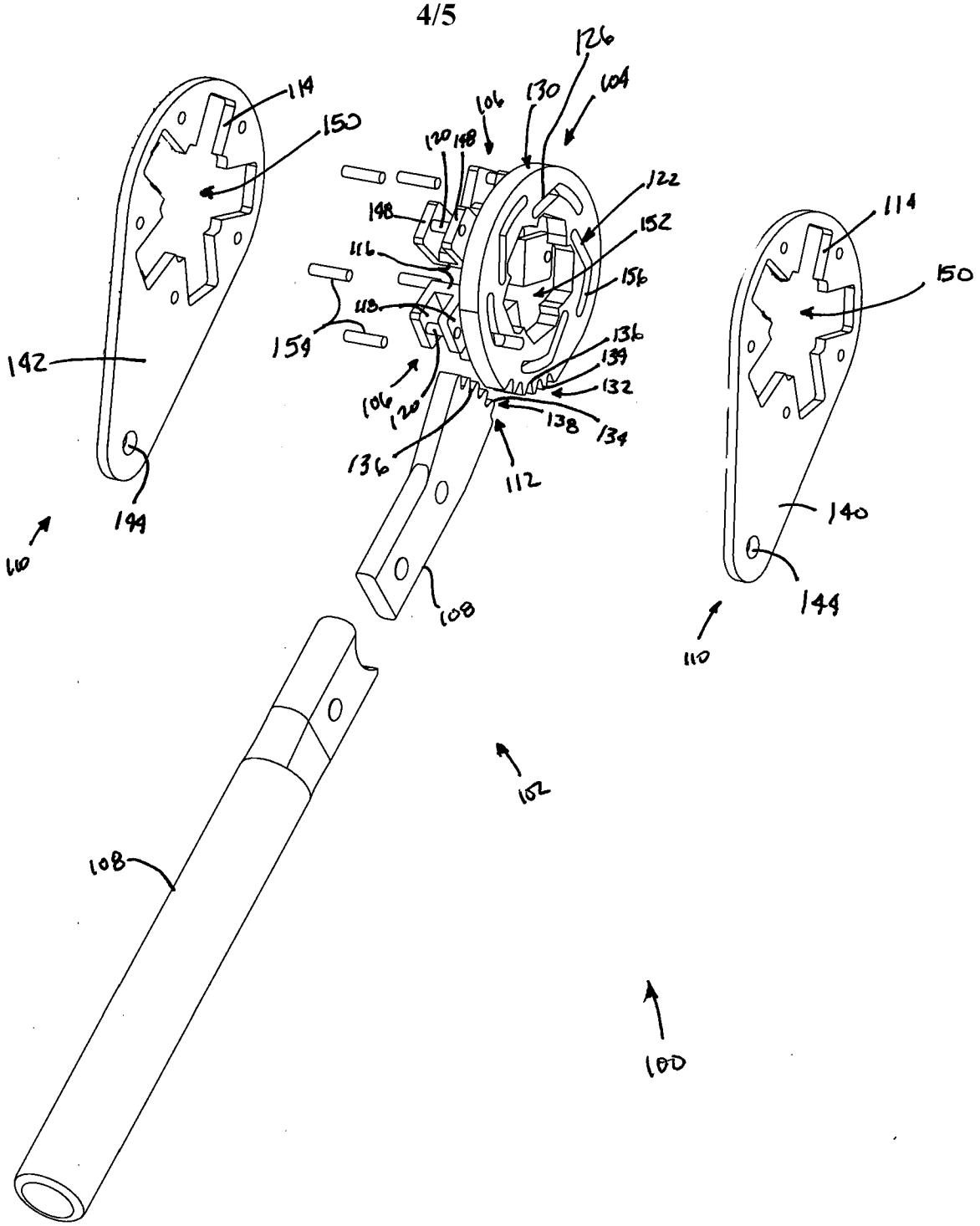
126
114
150
106
130
104
120
148
122
148
152
116
156
118
159
136
139
142
132
106
120
138
134
136
112
144
140
110
108
144
110
102
108
100

FIG. 4

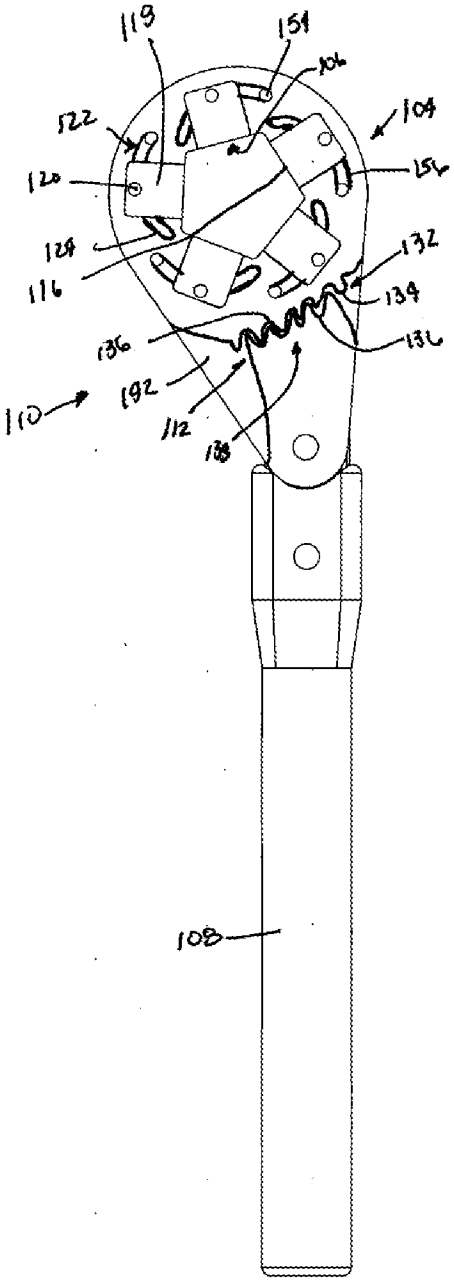
119
151
106
104
122
120
156
129
116
132
134
136
136
192
110
112
138
108

FIG. 5

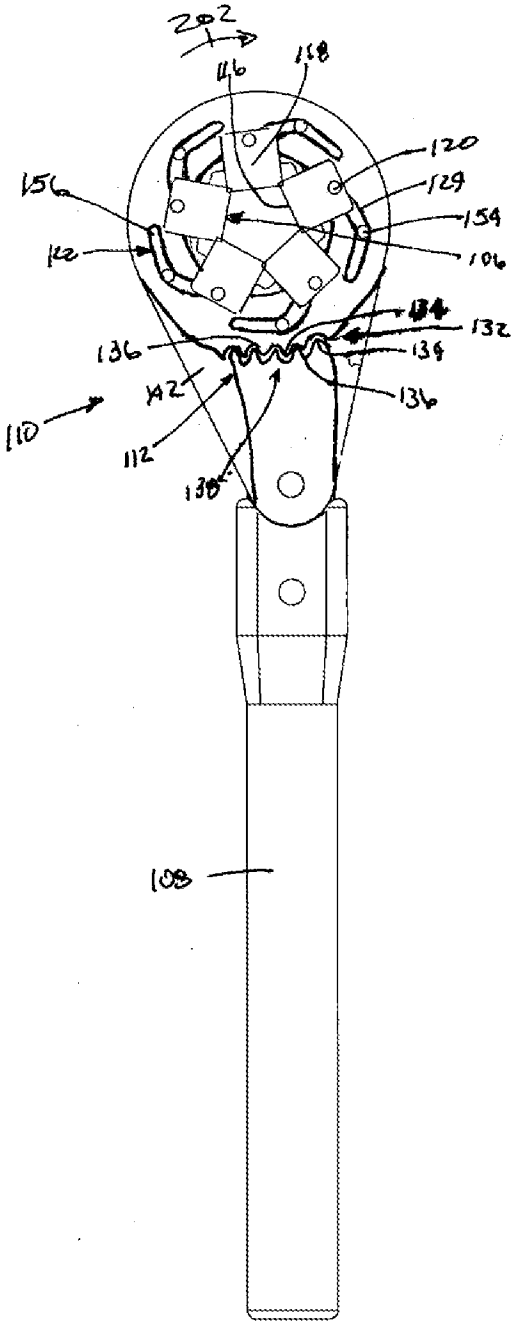
202
116
118
120
156
129
154
122
106
134
132
136
134
142
136
110
112
138
108

FIG. 6